Chapter 4
Construction Phase Erosion & Sediment Controls

Projects involving earth disturbance will generally require the implementation of one or more non-structural or structural practices for erosion and sediment control. This chapter presents a selection of such practices that may be used for projects in New Hampshire. Please note that the practices listed in this chapter are not all inclusive. Other practices may be acceptable, subject to NHDES review.

The BMPs identified in this manual have been selected to be consistent with the requirements of the Alteration of Terrain Regulations (Env-Wq 1500). This chapter provides a series of BMP descriptions, grouped according to the following categories:

- Erosion control practices;
- Sediment control practices; and
- Winter weather stabilization and construction practices.

In addition, the final section of the chapter discusses monitoring the erosion and sediment controls, and addressing the evolving conditions and contingencies that occur on construction sites.

Within each of the BMP categories, a summary is provided for each control measure, including the following information in standardized format:

- Brief description of each practice;
- Considerations for the selection, design, and application of the practice;
- Maintenance considerations regarding the practice;
- Specifications for the practice;

- Conceptual illustration or graphic depicting a typical design of the practice.

These fact sheets are intended to provide general sizing information for the practices presented, together with a conceptual overview of the practice. While the BMP "fact sheets" summarize the criteria for designing BMPs, they are meant to provide an overview of the measures discussed. There is extensive literature that describes the practices listed in this document, with many competent texts on the selection, siting, design, and operational characteristics of these BMPs. NHDES expects engineers, contractors, and professionals performing technical reviews to consult the design reference literature currently considered as accepted practice, and to prepare for and implement erosion and sediment controls on construction projects in New Hampshire.

Project applicants are also responsible for the design of projects in compliance with applicable local, state, and federal regulations, which may have specific standards and requirements for erosion and sediment control practices.

4-1. Erosion Control Practices

The following Erosion Control Practices are discussed in this Section:

- Construction phasing
- Dust control
- Grading practices
- Soil stockpile practices
- Temporary and permanent mulching
- Vegetation
- Temporary erosion control blanket
- Diversion
- Slope drain

CONSTRUCTION PHASING

General Description

Land grading activities are an essential component of site development and building construction, and are also often required for redevelopment construction. Land grading is often necessary to shape the existing land surface in accordance with a plan determined by engineering surveys and layout. The sequencing or phasing of land grading activities is essential to minimize the potential for erosion. Typically, a contractor will complete subgrade land grading activities and base course paving to prepare the site for the construction of buildings and other structures.

Proper construction phasing reduces the exposure of slopes to runoff and potential erosion, provides for stable temporary or permanent slopes, and facilitates the establishment of vegetation. When developing Construction-phasing activities, the contractor should anticipate potential delays in the schedule and be prepared to adjust activities to meet both project goals and erosion control goals.

Considerations

Construction phasing of land grading activities must be carefully planned and carried out to prevent erosion and sedimentation.

- Plan earth disturbance and grading activities to minimize the area of soil exposed at one time, as well as the length of time between initial soil exposure and final grading.
- Protect existing vegetation and natural forest cover, designated to remain on the site.
- Preserve and maintain buffer strips of undisturbed vegetation between construction areas and environmentally vulnerable areas such as watercourses, ponds, and wetlands.
- Divert clean water away from the immediate construction area to reduce the threat of erosion.

- Disperse clean stormwater to undisturbed, vegetated, flat or moderate-sloped, surfaces wherever possible, rather than concentrate it into channels.
- Fall and winter erosion control measures must be upgraded and refined to protect the site from spring runoff and snowmelt

Maintenance Requirements

- Any sign of rill or gully erosion should be immediately investigated and repaired as needed.
- Temporary stabilization measures should be inspected at least once per week during the construction period, or as stipulated by the applicable permits, until all exposed soils have been permanently stabilized.
- In addition to regular inspections, the project site should be inspected during or within 24 hours of any rain event in which ½ inch of precipitation or more falls within a 24-hour period.
- Inspections should be documented in a report. Reports should include the following:
- The inspection date;
    - Names, titles, and qualifications of personnel making the inspection;
    - Weather information and a description of any discharges occurring at the time of the inspection;
    - Location(s) of discharges of sediment or other pollutants from the site;
    - Location(s) of BMPs that need to be maintained;
    - Location(s) of BMPs that failed to operate as designed or proved inadequate for a particular location;
    - Location(s) where additional BMPs are needed that did not exist at the time of inspection; and
    - Corrective action required including implementation dates.

Specifications

- *Temporary stabilization:* All areas of exposed or disturbed soil should be temporarily stabilized as soon as practicable but no later than 45 days from the time of initial disturbance, unless a shorter time is specified by local authorities, the construction sequence approved as part of the issued permit, or an independent monitor.
- *Permanent stabilization:* All areas of exposed or disturbed soil should be permanently stabilized as soon as practicable but no later than 3 days following final grading.

Stabilization

A site is deemed to be stabilized when it is in a condition in which the soils on the site will not experience accelerated or unnatural erosion under the conditions of a 10-year storm, such as but not limited to:

- In areas that will not be paved, a minimum of 85% vegetative cover has been established, a minimum of 3" of non-erosive material such as stone or a certified compost blanket has been installed, or erosion control blankets have been installed.
- In areas to be paved, base course gravels have been installed.

- *Maximum area of disturbance:* The area of unstabilized soil should not exceed 5 acres at any time unless project permits specifically provide for a greater area of disturbance. Any such greater area of disturbance requires, as part of the permitting process:
    - Documentation that the required areas of earth cuts and fills are such that an area of disturbance of 5 acres or less would unreasonably limit the construction schedule;

- An approved construction sequence plan, developed by a professional engineer licensed to practice in the state of New Hampshire or a Certified Professional in Erosion and Sediment Control as certified by the CPESC Council of EnviroCert International, Inc.; and
- Employment or retainment of a professional engineer licensed to practice in the state of New Hampshire or a Certified Professional in Erosion and Sediment Control as certified by the CPESC Council of EnviroCert International, Inc. to serve as an environmental monitor during construction.

- Only disturb, clear, or grade areas necessary for construction. Flag or otherwise delineate areas not to be disturbed. Exclude vehicles and construction equipment from these areas to preserve natural vegetation.
- All graded or disturbed areas including slopes should be protected during clearing and construction in accordance with an approved erosion and sediment control plan until they are permanently stabilized.
- All erosion and sediment control practices and measures should be constructed, applied and maintained in accordance with the approved erosion and sediment control plan.
- Topsoil required for the establishment of vegetation should be stockpiled in the amount necessary to complete finished grading and protected from erosion.
- Stockpiles, borrow areas and spoils should be stabilized as described under "Soil Stockpile Practices."
- Slopes should not be created so close to property lines as to endanger adjoining properties without adequate protection against sedimentation, erosion, slippage, settlement, subsidence or other related damages.
- Areas to be filled should be cleared, grubbed and stripped of topsoil to remove trees, vegetation, roots or other objectionable materials.

- Areas should be scarified to a minimum depth of 3 inches prior to placement of topsoil. Topsoil should be placed without significant compaction to provide a loose bedding for placement of seed.
- All fills should be compacted in accordance with project specifications to reduce erosion, slippage, settlement, subsidence or other related problems. Fill intended to support buildings, structures, site utilities, conduits, and other facilities, should be compacted in accordance with local requirements or codes.
- In general, fills should be placed and compacted in layers ranging from 6 to 24 inches in thickness. The contractor should review the project geotechnical report for specific guidance. Fill material should be free of brush, rubbish, rocks, logs, stumps, building debris, frozen material and other objectionable materials that would interfere with or prevent construction of satisfactory lifts.
- Frozen material or soft, mucky or highly compressible materials are susceptible to accelerated settlement and potential accelerated erosion. Work in these materials should be performed under the direction of a professional engineer.
- The outer face of the fill slope should be allowed to stay loose, not rolled, compacted, or bladed smooth. A bulldozer may run up and down the fill slope so the dozer treads (cleat tracks) create grooves perpendicular to the slope. If the soil is not too moist, excessive compaction will not occur. See "Surface Roughening."
- Roughen the surface of all slopes during the construction operation to retain water, increase infiltration, and facilitate vegetation establishment.
- Use slope breaks, such as diversions, benches, or contour furrows as appropriate, to reduce the length of cut-and-fill slopes to limit sheet and rill erosion and prevent gully erosion. All benches should be kept free of sediment during all phases of development.

- Seeps or springs encountered during construction should be evaluated by a professional engineer to determine if the proposed design should be revised to properly manage the condition.
- Stabilize all graded areas with vegetation, crushed stone, compost blanket, or other ground cover as soon as grading is completed or if work is interrupted for 21 working days or more. Use mulch or other approved methods to stabilize areas temporarily where final grading must be delayed.
- All graded areas should be permanently stabilized immediately following finished grading.

DUST CONTROL

General Description

Dust control consists of applying various measures to prevent blowing and movement of dust from exposed soil surfaces. This practice is applicable to areas subject to dust blowing and soil movement where on-site and off-site damage is likely to occur if preventive measures are not taken. Typical dust control measures include traffic control, Construction phasing, and maintenance of existing vegetation to limit exposure of soils and prevent conditions that result in dry soils and dust; application of water, calcium chloride, and temporary stabilization practices to control mobilization of dust by equipment operation or wind; and pavement sweeping to prevent accumulation of dust-producing sediment.

Dusty conditions occur when a disturbed site, soil stockpiles, or unpaved road surfaces dry out. Soil fines can actually shrink due to moisture loss that, in turn, loosens and weakens the soil surface. The dust becomes mobilized by equipment trafficking or by wind action. Dust can also become mobilized from construction equipment spilling or tracking soil materials onto paved surfaces, as well as from the operation of stationary equipment such as rock crushers. Dust can cause off-site damage, be a health hazard to humans, wildlife and plant life, or become a traffic safety hazard.

Considerations

- Phase construction and sequence earth disturbance activities to reduce the area of land disturbed at any one time.
- Maintain as much natural vegetation as is practicable.
- Use traffic control to restrict traffic to predetermined routes.

- Use temporary mulching, permanent mulching, temporary vegetative cover, permanent vegetative cover, or sodding to reduce the need for dust control.
- Use mechanical sweepers on paved surfaces where necessary to prevent dust buildup. Stationary sources of dust (i.e., rock crushers) should utilize fine water sprays to control dust.
- Apply water, or other dust inhibiting agents or tackifiers, as approved by the NHDES.

Maintenance Requirements

- When temporary dust control measures are used, repetitive treatment should be applied as needed to accomplish control.

Specifications

Water Application:

- Moisten exposed soil surfaces periodically with adequate water to control dust.
- Avoid excessive application of water that would result in mobilizing sediment and subsequent deposition in natural waterbodies

Stone Application:

- Cover surface with crushed stone or coarse gravel.
- In areas adjacent to waterways, use only chemically stable or washed aggregate.

Other Commercial Products:

- The use of other commercial products (i.e., tackifiers) to stabilize exposed surfaces for dust control will be subject to acceptance by NHDES on a project-specific basis.

Other Practices:

- Apply other temporary and permanent stabilization practices as specified in this manual.
- Calcium chloride cannot be applied in watersheds with chloride-impaired waterbodies. Elsewhere, it should only be used when other methods are not practical, and following these guidelines:
    - For dry application, use a commercial chemical product that is either loose dry granules or flakes, fine enough to feed through a spreader at a rate that will keep the surface moist but not cause pollution or plant damage.
    - For liquid applications, the application rate will vary depending on the relative quality of materials in a given road surface. Some calcium chloride suppliers may require a road sample before recommending an application rate. Typically, 30% calcium chloride is recommended for most gravel roads.

SURFACE ROUGHENING

General Description

Surface roughening is a technique for creating furrows in a bare soil surface, by tracking the slope with construction equipment. The purpose of surface roughening is to aid the establishment of vegetative cover from seed, to reduce runoff velocity and increase infiltration, and to reduce erosion and provide for sediment trapping.

This practice applies to all construction slopes to facilitate long-term stabilization with vegetation, and particularly slopes steeper than 3:1.

Considerations

Graded areas with smooth, hard surfaces may be initially attractive, but such surfaces increase the potential for erosion. A rough, loose soil surface gives a mulching effect that provides more favorable moisture conditions than hard, smooth surfaces; this aids seed germination.

Methods for achieving a roughened soil surface on a slope include tracking, furrowing, and serrating (or grooving). Selection of the method is based on slope steepness, mowing requirements, and whether the slope is formed by cutting or filling.

Maintenance Requirements

- Any sign of rill or gully erosion should be immediately investigated and repaired as needed.
- Periodically inspect seeded slopes for rills or other signs of erosion. Fill these areas slightly above the original grade, reseed, and mulch as soon as possible, but no more than 3 days following inspection.

Specifications

Cut Slope Roughening:

- Groove the slope using machinery to create a series of ridges and depressions that run across the slope, on the contour.

Fill Slope Roughening:

- In general, fill slopes with a gradient steeper than 3:1 should be constructed in lifts not to exceed 12 inches, compacting each lift. The contractor should refer to the project geotechnical report for specific guidance.
- The face of the slope should consist of loose, uncompacted fill 4-6 inches deep.
- Use grooving or tracking to roughen the face of the slopes, if necessary.
- Apply seed, fertilizer and straw mulch, and then track or punch in the mulch with the bulldozer.
- Do not blade or scrape the final slope face.

Cuts, Fills, and Graded Areas:

- Make mowed slopes no steeper than 3:1.
- Roughen these areas to shallow grooves by normal tilling, disking, or harrowing. The final pass of any such tillage should be on the contour.
- Make grooves formed by such implements close together (less than 10 inches), and not less than 1 inch deep.
- Excessive roughness is undesirable where mowing is planned.

Roughening With Tracked Machinery:

- Limit roughening with tracked machinery to soils with a sandy textural component to avoid undue compaction of the soil surface.

- Operate tracked machinery up and down the slope to leave horizontal depressions in the soil. Do not back-blade during the final grading operation.
- Immediately seed and mulch roughened areas to obtain optimum seed germination and growth.

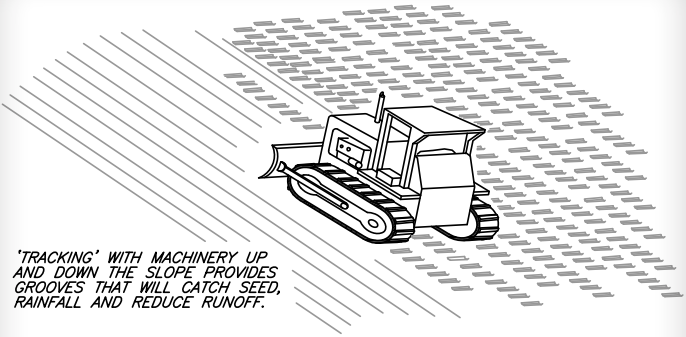

TRACKING

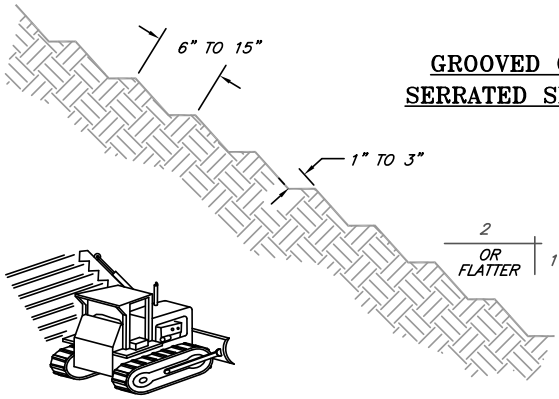

GROOVED OR SERRATED SLOPE

NOT TO SCALE

NOTE:

GROOVE BY CUTTING SERRATIONS ALONG THE CONTOUR. IRREGULARITIES IN THE SOIL SURFACE CATCH RAINWATER, SEED, MULCH AND FERTILIZER.

SURFACE ROUGHENING

ADAPTED FROM J. McCULLAH 1994

SOIL STOCKPILE PRACTICES

General Description

Soil stockpile practices include measures to locate, manage, and protect stockpiled earth materials, to reduce or eliminate wind and water erosion, and prevent resulting air and water pollution from displaced sediment. Stockpile practices apply to topsoil, excavated materials, borrow materials imported to the site, and construction aggregates and paving materials that are stockpiled on the site prior to use in the construction work.

Considerations

- Soil stockpiles should be sited on the site in compliance with all permit conditions governing setbacks from adjacent property lines and water resources (including wetlands).
- Soil and erosion control practices at stockpiles should be regularly inspected and should be adjusted immediately to respond to ongoing construction operations, as the delivery of new materials or the removal of materials for incorporation into the work may require modification and updating of the protective measures to keep them effective.

Maintenance Requirements

- Inspect all soil stockpiles immediately after storm events and at the frequencies specified in the project erosion and sediment control plan and in applicable permits. At a minimum, inspect weekly during wet weather periods to verify that erosion and sediment control measures are in place and functioning properly.
- Repair and/or replace perimeter controls and stockpile coverings as needed to keep them functioning properly.

Specifications

General:

- Locate stockpiles a minimum of 50 feet away from concentrated flows of stormwater, drainage courses, and inlets.
- Protect all stockpiles from stormwater run-on using temporary perimeter measures such as diversions, berms, sandbags, or other approved practice.
- Stockpiles should be surrounded by sediment barriers as described in this manual, to prevent migration of material beyond the immediate confines of the stockpiles.
- Implement wind erosion control practices as appropriate on all stockpiled material.
- Place bagged materials on pallets and under cover.

Protection of Inactive Stockpiles:

- Inactive soil stockpiles should be covered with anchored tarps or protected with soil stabilization measures (temporary seed and mulch or other temporary stabilization practice) and temporary perimeter sediment barriers at all times.
- Inactive stockpiles of concrete rubble, asphalt concrete rubble, aggregate materials, and other similar materials should be protected with temporary sediment perimeter barriers at all times. If the materials are a source of dust, they should also be covered.

Protection of Active Stockpiles:

- All stockpiles should be surrounded with temporary linear sediment barriers prior to the onset of precipitation. Perimeter barriers should be maintained at all times, and adjusted as needed to accommodate the delivery and removal of materials from the stockpile. The integrity of the barrier should be inspected at the end of each working day.
- When a storm event is predicted, stockpiles should be protected with an anchored protective covering.

TEMPORARY & PERMANENT MULCHING

General Description

Temporary mulching consists of the application of plant residues or other suitable materials to the soil surface. Mulching reduces erosion potential by protecting the exposed soil surface from direct impact by rainfall. It also aids in the growth of vegetation by conserving available moisture, controlling weeds, and providing protection against extreme heat and cold. Mulches can also protect the infiltration rate of the soil, prevent soil compaction, and provide a suitable microclimate for seed germination. This is the quickest and most cost effective method of preventing erosion on disturbed soils and its value should not be underestimated.

Permanent mulch consists of the application of long-term surface cover such as bark, wood chips, or erosion control mix. Permanent mulch can be used as a permanent ground cover, as an overwinter stabilization mulch, or left to naturalize. It is not designed to support grass vegetation, but legumes or woody vegetation may be established for additional stability. Permanent mulch must not be used in areas of concentrated water flows. Slopes with evidence of groundwater seepage may require the use of other treatments such as riprap.

The composition of "erosion control mix" is further described in this section. In addition to its use for the temporary or semi-permanent stabilization of slopes, it can be applied to protect areas from erosion during spring thaw. It can also been used in construction yards to mitigate muddy conditions. In these applications, the erosion control mix application rate will need to be adjusted for the site conditions, use, and long-term effectiveness. With time, the organic component of the erosion control mix will decompose and become ineffective. Any required repairs should be made immediately, with additional erosion control mix placed on top to reach the desired thickness.

Considerations

- Within 100 feet of streams, wetlands and in lake watersheds, temporary mulch should be applied **within 7 days of exposing soil or prior to any storm event**.
- Areas that have been temporarily or permanently seeded should be mulched immediately following seeding.
- Areas that cannot be seeded within the growing season should be mulched for over-winter protection. The area should be seeded at the beginning of the next growing season.
- Mulch anchoring should be used on slopes with gradients greater than 5% in late fall (past September 15), and over-winter (September 15 - May 15).
- Permanent mulch can be used in conjunction with tree, shrub, vine, and ground cover plantings.

Maintenance Requirements

- All temporary mulches must be inspected periodically and in particular after rainstorms, to check for rill erosion or displacement of the mulch. If less than 90% of the soil surface is covered by mulch, additional mulch should be immediately applied. Nets must be inspected after rain events for dislocation or failure. If washouts or breakages occur, repair any damage to the slope and re-install or replace netting as necessary. Inspections should take place until grasses are firmly established (85% soil surface uniformly covered with healthy stand of grass).
- Erosion control mix mulch used for temporary stabilization should be left in place. Vegetation adds stability and should be promoted.
- Where permanent mulch is used in conjunction with ornamental plantings, inspect periodically throughout the year to determine if mulch is maintaining coverage of the soil surface. Repair as needed.

- Permanent mulched areas should be inspected at least annually, and after each large rainfall (2.5 inches or more in a 24-hour period). Any required repairs should be made immediately. Where erosion control mix has been used, place additional mix on top of the mulch to maintain the recommended thickness. When the mulch is decomposed, clogged with sediment, eroded or ineffective, it must be replaced or repaired.
- If the mulch needs to be removed, spread it out into the landscape.

Specifications

General:

- Apply mulch prior to a storm event. This is applicable in extremely sensitive areas such as within 100 feet of lakes, ponds, rivers, streams, and wetlands. It will be necessary to closely monitor weather predictions to have adequate warning of significant storms.
- Mulching should be completed within the following specified time periods from original soil exposure:
    - Within 100 feet of rivers and streams, wetlands, and in lake and pond watersheds, the time period should be no greater than 7 days. This 7-day limit should be reduced further during wet weather periods.
    - In other areas, the time period can range from 14 to 30 days, the length of time varying with site conditions (soil erodibility, season of year, extent of disturbance, proximity to sensitive resources) and the potential impact of erosion on adjacent areas. Other state or local restrictions may also apply.
- The choice of materials for mulching should be based on site conditions, soils, slope, flow conditions, and time of year.

Hay or Straw Mulches:

- Organic mulches including hay and straw should be air-dried, free of undesirable seeds and coarse materials.
- Application rate should be 2 bales (70-90 pounds) per 1000 square feet or 1.5 to 2 tons (90-100 bales) per acre to cover 75 to 90 % of the ground surface.
- Hay or straw mulch should be anchored to prevent displacement by wind or flowing water, using one of the following methods:
    - Netting: Install jute, wood fiber, or biodegradable plastic netting over hay or straw to anchor it to the soil surface. Install netting material according to manufacturer's recommendation. Netting should be used judiciously, as wildlife can become entangled in the materials.
    - Tackifier: Apply polymer or organic tackifier to anchor hay or straw mulch. Application rates vary by manufacturer: typically 40-60 lbs/acre for polymer material, and 80-120 lbs/acre for organic material. Liquid mulch binders are also typically applied heavier at edges, in valleys, and at crests than other areas.
- When mulch is applied to provide protection over winter (past the growing season), it should be applied to a depth of four inches (150-200 pounds of hay or straw per 1000 square feet, or double standard application rate). Seeding cannot generally be expected to grow up through this depth of mulch and will be smothered. If vegetation is desired, the mulch will need to be removed in the springtime and the area seeded and mulched.

Wood Chips or Bark:

- Wood chips or ground bark should be applied to a thickness of 2 to 6 inches.
- Wood chips or ground bark should be applied at a rate of 10 to 20 tons per acre or 460 to 920 pounds per 1,000 square feet.

Erosion Control Mix:

Erosion control mix can be manufactured on or off the project site. It must consist primarily of organic material, separated at the point of generation, and may include shredded bark, stump grindings, composted bark, or acceptable manufactured products. Wood and bark chips, ground construction debris or reprocessed wood products will not be acceptable as the organic component of the mix.

- Composition of the erosion control mix should be as follows:
    - Erosion control mix should contain a well-graded mixture of particle sizes and may contain rocks less than 4" in diameter. Erosion control mix must be free of refuse, physical contaminants, and material toxic to plant growth. The mix composition should meet the following standards:
    - The organic matter content should be between 25 and 65%, dry weight basis.
    - Particle size by weight should be 100% passing a 3" screen, 90% to 100% passing a 1-inch screen, 70% to 100% passing a 0.75-inch screen, and a maximum of 30% to 75%, passing a 0.25-inch screen.
    - The organic portion needs to be fibrous and elongated.
    - The mix should not contain silts, clays or fine sands.
    - Soluble salts content should be < 4.0 mmhos/cm.
    - The pH should be between 5.0 and 8.0.
- The barrier must be placed along a relatively level contour. It may be necessary to cut tall grasses or woody vegetation to avoid creating voids and bridges that would enable fines to wash under the barrier through the grass blades or plant stems.
- The barrier must be a minimum of 12" high, as measured on the uphill side of the barrier, and a minimum of two feet wide.

Erosion Control Blankets and Mats:

- Mats are manufactured combinations of mulch and netting designed to protect against erosion, and also to retain soil moisture and modify soil temperature. See further specifications under "Temporary Erosion Blankets."

TEMPORARY VEGETATION

General Description

Temporary vegetation consists of the establishment of a grass and legume cover on exposed soils for periods of up to 12 months. The purpose is to reduce erosion and sedimentation by stabilizing disturbed areas that will not be brought to final grade for a year or less and to reduce problems associated with mud and dust production from exposed soil surfaces during construction. Temporary seeding is also essential to preserve the integrity of earthen structures used to control sediment, such as diversions and the embankments of sediment basins.

Runoff and sheet erosion caused by splash erosion (raindrop impact on bare soil) is the source of most fine particles in sediment. To reduce the sediment load in runoff, the soil surface itself should be protected. The most effective and economical means of controlling sheet and rill erosion is to establish a vegetative cover. Annual plants that sprout rapidly and survive for only one growing season are suitable temporary vegetative cover.

Temporary vegetative cover should be applied where exposed soil surfaces will not be final graded within 45 days from initial disturbance. Such areas include excavated areas, soil stockpiles, berms, embankments and sides of sediment basins, temporary road banks, and other earthworks.

Considerations

- Proper seedbed preparation and the use of quality seed are important in this practice. Failure to carefully follow sound agronomic recommendations will often result in an inadequate stand of vegetation that provides little or no erosion control.

- Nutrients and pesticides used to establish and maintain vegetation must be managed to protect surface water and groundwater quality.
- Temporary seeding should be used extensively in sensitive areas (e.g., pond and lake watersheds, steep slopes, streambanks).
- Late fall seeding may fail, resulting in inadequate overwinter erosion protection, as well as potential surface stability problems associated with spring thaw and spring runoff events. If full stabilization is not achieved by late fall, other stabilization measures such as mulching should be implemented.

Maintenance Requirements

- Temporary seeding should be inspected weekly and after any rainfall exceeding ½ inch in 24 hours on active construction sites. Temporary seeding should also be inspected just prior to September 15, to ascertain whether additional seeding is required to provide stabilization over the winter period.
- Based on inspection, areas should be reseeded to achieve full stabilization of exposed soils. If it is too late in the planting season to apply additional seed, then other temporary stabilization measures should be implemented
- At a minimum, 85% of the soil surface should be covered by vegetation.
- If any evidence of erosion or sedimentation is apparent, repairs should be made and areas should be reseeded, with other temporary measures (e.g., mulch) used to provide erosion protection during the period of vegetation establishment.

Specifications

Site Preparation:

- Install needed erosion and sediment control measures such as siltation barriers, diversions, and sediment traps.
- Grade as needed for the access of equipment for seedbed preparation, seeding, mulch application, and mulch anchoring.
- Runoff should be diverted from the seeded area.
- On slopes 4:1 or steeper, the final preparation should include creating horizontal grooves perpendicular to the direction of the slope to catch seed and reduce runoff.

Seedbed Preparation:

- Stones and trash should be removed so as not to interfere with the seeding area.
- Where the soil has been compacted by construction operations, loosen soil to a depth of 2 inches before applying fertilizer, lime and seed.
- If applicable, fertilizer and organic soil amendments should be applied during the growing season.
    - Apply limestone and fertilizer according to soil test recommendations. If soil testing is not feasible on small or variable sites, or where timing is critical, fertilizer may be applied at the rate of 600 pounds per acre or 13.8 pounds per 1,000 square feet of low phosphate fertilizer[1] (N-P2O5-K2O) or equivalent. Apply limestone (equivalent to 50 percent calcium plus magnesium oxide) at a rate of 3 tons per acre (138 lb. per 1,000 square feet).

1 Low phosphate fertilizer is defined by the Comprehensive Shoreland Protection Act as less than 2% phosphorus. The University of New Hampshire Cooperative Extension has found through soil tests that NH's soils have ample phosphorus and recommend low phosphorus fertilizers with 0% - 1% phosphorus such as 3:1:3 or 10:0:10 N:P:K. They discourage the use of imbalanced fertilizers.

- Fertilizer should be restricted to a low phosphate, slow release[2] nitrogen fertilizer when applied to areas between 25 feet and 250 feet from a surface water body. No fertilizer except limestone should be applied within 25 feet of a surface water body. **These limitations are requirements for any water body protected by the Comprehensive Shoreland Protection Act.**

Seeding:

- Select seed from recommendations in Table 4-1.
- Apply seed uniformly by hand, cyclone seeder, drill, cultipacker type seeder or hydroseeder (slurry including seed and fertilizer). Normal seeding depth is from ¼ to ½ inch. Hydroseeding that includes mulch may be left on soil surface. Seeding rates must be increased 10 % when hydroseeding.
- Temporary seeding should typically occur prior to September 15th.
- Areas seeded between May 15th and August 15th should be covered with hay or straw mulch, according to the "Temporary and Permanent Mulching" practice.
- Vegetated growth covering at least 85% of the disturbed area should be achieved prior to October 15th. If this condition is not achieved, implement other temporary stabilization measures for overwinter protection.

2 Slow release fertilizers must be at least 50% slow release nitrogen components, which means that half of the nitrogen will not be immediately available. Typically, it takes 2-24 weeks for all slow-release nitrogen to become available. Slow-release fertilizers do not necessarily reduce nitrogen loading. Nitrogen fertilizers are necessary for grass lawns, however, according to the UNH Cooperative Extension, nitrogen fertilizers for lawns that consist of legume and clover are not necessary.

Table 4-1. Seeding Recommendations for Temporary Vegetation

Species	Per Acre bushels (BU) or pounds (lbs)	Per 1,000 ft^2	Remarks
Winter Rye	2 BU. or 112 lbs.	2.5 lbs.	Best for fall seeding. Seed from August 15 to September 15 for best cover. Seed to a depth of 1 inch.
Oats	2.5 BU. or 80 lbs.	2 lbs.	Best for spring seedings. Seed no later than May 15 for summer protection. Seed to a depth of 1 inch.
Annual Ryegrass	40 lbs.	1 lb.	Grows quickly, but is of short duration. Use where appearances are important. Seed early spring and/or between August 15 and September 15. Cover the seed with no more than 0.25 inch of soil.
Perennial Ryegrass	30 lbs.	0.7 lb.	Good cover which is longer lasting than annual ryegrass. Seed between April 1 and June 1 and/or between August 15 and September 15. Mulching will allow seeding throughout the growing season. Seed to a depth of approximately 0.5 inch.

Source: Minnick, E.L. and H.T. Marshall. (August 1992)

PERMANENT VEGETATION

General Description

Permanent vegetative cover should be established on disturbed areas where permanent, long-lived vegetative cover is needed to stabilize the soil, to reduce damages from sediment and runoff, and to enhance the environment.

Runoff and sheet erosion caused by splash erosion (raindrop impact on bare soil) is the source of most fine particles in sediment. To reduce the sediment load in runoff, the soil surface itself should be protected. The most effective and economical means of controlling sheet and rill erosion is to establish a vegetative cover.

Considerations

- Proper seedbed preparation and the use of quality seed are important in this practice. Failure to carefully follow sound agronomic recommendations will often result in an inadequate stand of vegetation that provides little or no erosion control.
- Nutrients and pesticides used to establish and maintain vegetation must be managed to protect surface water and groundwater quality.

Maintenance Requirements

- Permanent seeded areas should be inspected at least monthly during the course of construction. Inspections, maintenance, and corrective actions should continue until the owner assumes permanent operation of the site.
- Seeded areas should be mowed as required to maintain a healthy stand of vegetation, with mowing height and frequency dependent on type of grass cover.
- Based on inspection, areas should be reseeded to achieve full stabilization of exposed soils.

- At a minimum, 85% of the soil surface should be covered by vegetation.
- If any evidence of erosion or sedimentation is apparent, repairs should be made and areas should be reseeded, with other temporary measures (e.g., mulch) used to provide erosion protection during the period of vegetation establishment.

Specifications

Site Preparation:

- Install needed erosion and sediment control measures such as siltation barriers, diversions, and sediment traps.
- Grade as needed for the access of equipment for seedbed preparation, seeding, mulch application, and mulch anchoring.
- Runoff should be diverted from the seeded area.
- On slopes 4:1 or steeper, the final preparation should include creating horizontal grooves perpendicular to the direction of the slope to catch seed and reduce runoff.

Seedbed Preparation:

- Work lime and fertilizer into the soil as nearly as practical to a depth of 4 inches with a disc, spring tooth harrow or other suitable equipment. The final harrowing operation should be on the general contour. Continue tillage until a reasonably uniform, fine seedbed is prepared. All but clay or silty soils and coarse sands should be rolled to firm the seedbed wherever feasible.
- Remove from the surface all stones 2 inches or larger in any dimension. Remove all other debris, such as wire, cable, tree roots, concrete, clods, lumps, trash or other unsuitable material.
- Inspect seedbed just before seeding. If traffic has left the soil compacted; the area must be tilled and firmed as above.

- Where the soil has been compacted by construction operations, loosen soil to a depth of 2 inches before applying fertilizer, lime and seed.
- If applicable, fertilizer and organic soil amendments should be applied during the growing season.
    - Apply limestone and fertilizer according to soil test recommendations. If soil testing is not feasible on small or variable sites, or where timing is critical, fertilizer may be applied at the rate of 600 pounds per acre or 13.8 pounds per 1,000 square feet of low phosphate fertilizer[1] (N-P2O5-K2O) or equivalent. Apply limestone (equivalent to 50 percent calcium plus magnesium oxide) at a rate of 3 tons per acre (138 lb. per 1,000 square feet).
    - Fertilizer should be restricted to a low phosphate, slow release[2] nitrogen fertilizer when applied to areas between 25 feet and 250 feet from a surface water body. No fertilizer except limestone should be applied within 25 feet of the surface water. **These limitations are requirements for any water body protected by the Comprehensive Shoreland Protection Act.**

1 Low phosphorus fertilizer is defined by the Comprehensive Shoreland Protection Act as less than 2% phosphorus. The University of New Hampshire Cooperative Extension has found through soil tests that NH's soils have ample phosphorus and recommend low phosphorus fertilizers with 0% - 1% phosphorus such as 3:1:3 or 10:0:10 N:P:K. They discourage the use of imbalanced fertilizers.

2 Slow release fertilizers must be at least 50% slow release nitrogen component, which means that half of the nitrogen will not be immediately available. Typically, it takes 2-24 weeks for all slow-release nitrogen to become available. Slow-release fertilizers do not necessarily reduce nitrogen loading. Nitrogen fertilizers are necessary for grass lawns, however, according to the UNH Cooperative Extension, nitrogen fertilizers for lawns that consist of legume and clover are not necessary.

Seeding:

- Select a seed mixture in Table 4-2 that is appropriate for the soil type and moisture content as found at the site, for the amount of sun exposure and for level of use. Select seed from recommendations in Table 4-3.
- Inoculate all legume seed with the correct type and amount of inoculant.
- Apply seed uniformly by hand, cyclone seeder, drill, cultipacker type seeder or hydroseeder (slurry including seed and fertilizer). Normal seeding depth is from ¼ to ½ inch. Hydroseeding that includes mulch may be left on soil surface. Seeding operations should be on the contour.
- Where feasible, except where either a cultipacker type seeder or hydroseeder is used, the seedbed should be firmed following seeding operations with a roller, or light drag.
- Spring seeding usually gives the best results for all seed mixes or with legumes. Permanent seeding should be completed 45 days prior to the first killing frost. When crown vetch is seeded in later summer, at least 35% of the seed should be hard seed (unscarified). If seeding cannot be done within the specified seeding dates, mulch according to the "Temporary and Permanent Mulching practice," and delay seeding until the next recommended seeding period.
    - Temporary seeding should typically occur prior to September 15th.
    - Areas seeded between May 15th and August 15th should be covered with hay or straw mulch, according to the "Temporary and Permanent Mulching" practice.
- Vegetated growth covering at least 85% of the disturbed area should be achieved prior to October 15th. If this condition is not achieved, implement temporary stabilization measures for overwinter protection, and complete permanent seed stabilization during the next growing season.

Hydroseeding:

- When hydroseeding (hydraulic application), prepare the seedbed as specified above or by hand raking to loosen and smooth the soil and to remove surface stones larger than 2 inches in diameter.
- Slopes must be no steeper than 2 to 1 (2 feet horizontally to 1 foot vertically).
- Lime and fertilizer may be applied simultaneously with the seed. The use of fiber mulch on critical areas is not recommended (unless it is used to hold straw or hay). Better protection is gained by using straw mulch and holding it with adhesive materials or 500 pounds per acre of wood fiber mulch.
- Seeding rates must be increased 10% when hydroseeding.

Table 4-2. Seed Mixture Selection Based on Soil Type

Use	Seed Mixture See Table 4-3	Soil Drainage			
		Droughty	Well Drained	Moderately Well Drained	Poorly Drained
Steep cuts and fills, borrow and disposal areas	A	Fair	Good	Good	Fair
	B	Poor	Good	Fair	Fair
	C	Poor	Good	Excellent	Good
	D	Fair	Fair	Good	Excellent
	E	Fair	Excellent	Excellent	Poor
Waterways, emergency spillways, and other channels with flowing water	A	Good	Good	Good	Fair
	C	Good	Excellent	Excellent	Fair
	D	Good	Excellent	Excellent	Fair
Lightly used parking lots, odd areas, unused lands, and low intensity use recreation sites	A	Good	Good	Good	Fair
	B	Good	Good	Fair	Poor
	C	Good	Excellent	Excellent	Fair
	D	Fair	Good	Good	Excellent
Play areas and athletic fields. (Topsoil is essential for good turf.)	F	Fair	Excellent	Excellent	See Note 2
	G	Fair	Excellent	Excellent	See Note 2
Gravel pit	See source document for recommendations, or consult with USDA Natural Resource Conservation Service.				

Source: Minnick, E.L. and H.T. Marshall. (August 1992)

Note: Poorly drained soils are not desirable for use as playing areas and athletic fields.

Table 4-3. Seed Mixtures for Permanent Vegetation

Mixture	Species	Pounds Per Acre	Pounds Per 1,000 Sq. Ft.
A	Tall fescue	20	0.45
	Creeping red fescue	20	0.45
	Redtop	2	0.05
	Total	*42*	*0.95*
B[3]	Tall fescue	15	0.35
	Creeping red fescue	10	0.25
	Crown vetch	15	0.35
	or	-	-
	Flatpea	30	0.75
	Total	*40 or 55*	*0.95 or 1.35*
C[3]	Tall fescue	20	0.45
	Creeping red fescue	20	0.45
	Birdsfoot trefoil	8	0.20
	Total	*48*	*1.10*
D[3]	Birdsfoot trefoil	10	0.25
	Redtop	5	0.10
	Reed Canarygrass[1]	15	0.35
	Total	*30*	*0.70*
E	Tall fescue	20	0.45
	Flatpea	30	0.75
	Total	*50*	*1.20*
F	Creeping red fescue[2]	50	1.15
	Kentucky bluegrass[2]	50	1.15
	Total	*100*	*2.30*
G	Tall fescue[2]	*150*	*3.60*

Table 4-3 Source: Minnick, E.L. and H.T. Marshall. (August 1992)

Notes:

1. Reed canary grass is on the invasive species watch list due to its rapid, aggressive growth and its ability to move into wetlands and out-compete other desirable wetland plants. Caution should be used when planted near wetlands.
2. For heavy use athletic fields, consult the University of New Hampshire Cooperative Extension Turf Specialist for current varieties and seeding rates.
3. The University of New Hampshire Cooperative Extension recommends red clover to substitute for crown vetch or birdsfoot trefoil if they are going to be mowed to a height of 4 inches or less. Red clover (Alsike variety) should be seeded at a rate of 20 pounds per acre.

TEMPORARY EROSION CONTROL BLANKET

General Description

Erosion control blankets or mats consist of protective manufactured mulch blankets, installed on prepared soil surfaces to provide erosion protection and surface stability on steep slopes, vegetated channels, or shorelines during vegetation establishment.

Erosion control blankets temporarily stabilize and protect disturbed soil from raindrop impact and surface erosion. Like other types of mulch, the blankets help increase infiltration, decrease compaction and soil crusting, and conserve soil moisture. Erosion control blankets increase the germination rates for grasses and legumes and promote vegetation establishment. Erosion control blankets also protect seeds from predators and reduce desiccation and evaporation by insulating the soil and seed environment.

Erosion control blankets generally consist of machine-made mats made of organic, biodegradable mulch such as straw, curled wood fiber (excelsior), coconut fiber or a combination thereof, evenly distributed on or between manufactured netting. Netting is typically composed of photodegradable polypropylene or biodegradable natural fiber. The blankets are provided in rolls for ease of handling and installation.

Note: This erosion control practice as described in this manual does not cover the selection and installation of turf reinforcement products. If such products are used on-site, they must be included in the project plans, designed by a professional engineer registered in New Hampshire, and included in permit approvals.

Considerations

Erosion control blankets can be applied to steep slopes, vegetated waterways, and other areas sensitive to erosion, to supplement vegetation during initial establishment and help provide for safe conveyance of runoff over the protected surface.

- During the growing season (April 15 - September 15) use mats (or mulch and netting) on:
  - The base of grassed waterways
  - Steep slopes (15% or greater)
  - Any disturbed soil within 100 feet of lakes, streams and wetlands
- During the late fall and winter (September 15 - April 15) use heavy grade mats on all areas noted above plus use lighter grade mats (or mulch and netting) on:
  - Side slopes of grassed waterways
  - Moderate slopes (greater than 8%) There may be cases where mats will be needed on slopes flatter than 8%, depending on site conditions and the length of the slope.
- The most critical aspect of installing mats is obtaining firm continuous contact between the mat and the soil. Without such contact, the mat is useless and erosion occurs.
- Install mats and staple in accordance with the manufacturer's recommendations.
- The designer must exercise care to choose the type of blanket or matting which is appropriate for the specific objectives and site conditions of the project. There are many soil stabilization products available, and a thorough review by an engineer or erosion control professional is necessary to evaluate the advantages, disadvantages, and construction requirements of the manufactured products, and to select and specify a product for a particular application.

Maintenance Requirements

- All blanket and mats should be inspected weekly during the construction period, and after any rainfall event exceeding ½ inch in a 24-hour period.
- Any failure should be repaired immediately. If washout of the slope, displacement of the mat, or damage to the mat occurs, the affected slope shall be repaired and reseeded, and the affected area of mat shall be re-installed or replaced.

Specifications

Site Preparation:

Proper site preparation is essential to ensure complete contact of the protection matting with the soil.

- Grade and shape area of installation.
- Remove all rocks, clods, trash, vegetative or other obstructions so that the installed blankets will have direct contact with the soil.
- Prepare seedbed by loosening 2-3 inches of topsoil above final grade.
- Incorporate amendments, such as lime and fertilizer, into soil according to soil test and the seeding plan.

Seeding:

- Seed area before blanket installation for erosion control and re-vegetation. Seeding after mat installation is often specified for turf reinforcement application. When seeding prior to blanket installation, all check slots and other areas disturbed during installation must be reseeded.
- Where soil filling is specified, seed the matting and the entire disturbed area after installation and prior to filling the mat with soil.

Installing and Anchoring Blankets:

- **Blankets shall be installed and anchored per the manufacturer's specifications. If the manufacturer's instructions differ from those listed below, the manufacturer's instructions should be followed.**
- Blankets shall be placed within 24 hours after sowing seed in that area.
- U-shaped wire staples, metal geotextile stake pins, or triangular wooden stakes can be used to anchor mats to the ground surface.
    - Wire staples should be a minimum gauge as specified by the manufacturer.
    - Metal stake pins should be 3/16-inch diameter steel with a 1 1/2 inch steel washer at the head of the pin, or as specified by the manufacturer.
- Wire staples and metal stakes should be driven flush to the soil surface. All anchors should have sufficient ground penetration to resist pullout. Longer anchors may be required for loose soils.

Installation on Slopes:

- **Blankets shall be installed on slopes per the manufacturer's specifications. If the manufacturer's instructions differ from those listed below, the manufacturer's instructions should be followed.**
- Blankets shall be laid loosely over the soils, maintaining contact with the soil, and not stretched.
- Blankets shall be anchored at the top of the slope in a trench to prevent runoff from undermining the mat. Subsequent mats should be overlapped by the upslope mat. Backfill trench and tamp earth firmly.

- Blankets shall be unrolled in the direction of the water flow, overlapping the edges by a minimum of 4 inches and stapling the edges, as directed by the manufacturer.
- When blankets must be spliced, place blankets end over end (shingle style) with 6-inch minimum overlap. Staple through overlapped area, approximately 12 inches apart, or as specified by manufacturer.
- Lay blankets loosely and maintain direct contact with the soil - do not stretch.
- Blankets shall be stapled sufficiently to anchor blanket and maintain contact with the soil. Staples shall be placed down the center and staggered with the staples placed along the edges. Stapling pattern and number of staples will depend on steepness of slope and manufacturer's anchoring methods; follow manufacturer's instructions.

Installation in Channels:

- **Blankets shall be installed in channels per the manufacturer's specifications. If the manufacturer's instructions differ from those listed below, the manufacturer's instructions should be followed.**
- Dig initial anchor trench across the channel at the lower end of the project area.
- Excavate intermittent check slots, across the channel at 25-30 foot intervals along the channel, or as specified by manufacturer.
- Cut longitudinal channel anchor slots along each side of the installation to bury edges of matting. Whenever possible extend matting 2-3 inches above the crest of channel side slopes.
- Beginning at the downstream end and in the center of the channel, place the initial end of the first roll in the anchor trench and secure with fastening devices, as directed by the manufacturer. Note: matting will initially be upside down in anchor trench.

- In the same manner, position adjacent rolls in anchor trench, overlapping the preceding roll a minimum of 3 inches.
- Secure these initial ends of mats with anchors at manufacturer's specified intervals, backfill and compact soil.
- Unroll center strip of matting upstream. Stop at next check slot or terminal anchor trench.
- Unroll adjacent mats upstream in similar fashion, maintaining a 3-inch minimum overlap.
- Fold and secure all rolls of matting snugly into all transverse check slots. Lay mat in the bottom of the slot then fold back against itself. Anchor through both layers of mat at manufacturer's specified intervals, then backfill and compact soil. Continue rolling all mat widths upstream to the next check slot or terminal anchor trench.
- Alternate method for noncritical installations: place two rows of anchors on 6-inch centers at 25-30 feet intervals in lieu of excavated check slots.
- Shingle-lap spliced ends by a minimum of 1 foot with upstream mat on top to prevent uplifting by water or begin new rolls in a check slot. Anchor overlapped area by placing two rows of anchors, 1 foot apart on 1-foot intervals.
- Place edges of outside mats in previously excavated longitudinal slots, anchor using prescribed staple pattern, backfill and compact soil.
- Anchor, fill and compact upstream end of mat in a terminal trench, as directed by manufacturer.
- Secure mat to ground surface using U-shaped wire staples, geotextile pins, wooden stakes, or other anchors as recommended by the manufacturer.

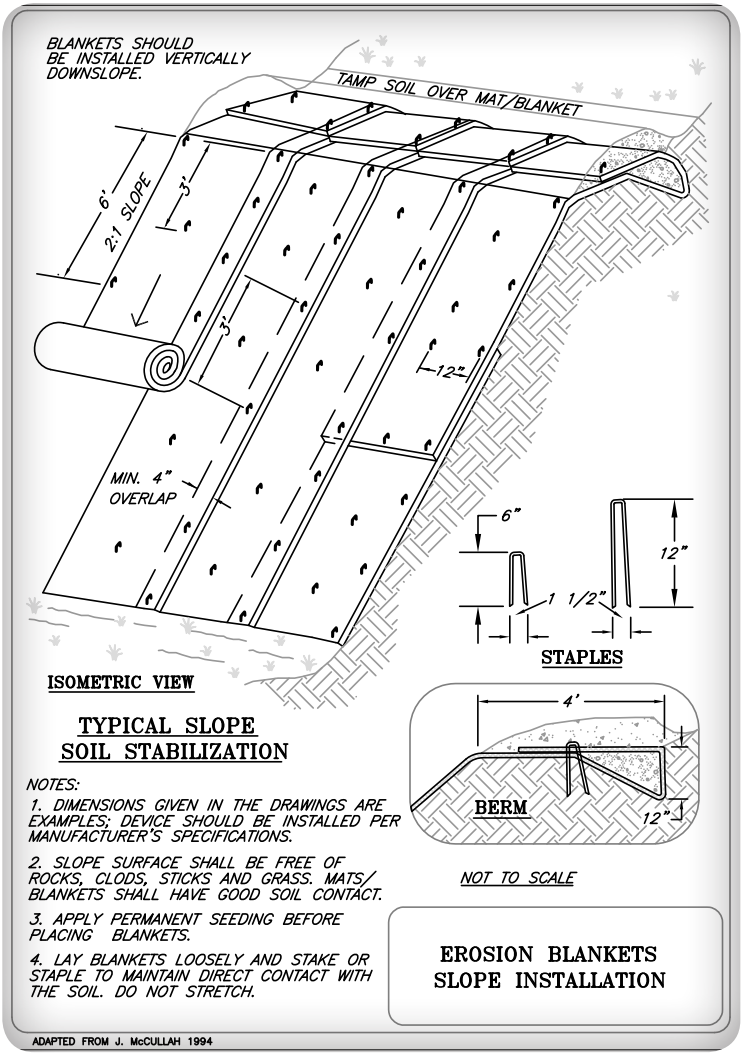
BLANKETS SHOULD BE INSTALLED VERTICALLY DOWNSLOPE.
TAMP SOIL OVER MAT/BLANKET
6'
2:1 SLOPE
3'
3'
12"
MIN. 4" OVERLAP
ISOMETRIC VIEW
TYPICAL SLOPE SOIL STABILIZATION
6"
12"
1 1/2"
STAPLES
4'
BERM
12"
NOT TO SCALE
NOTES:
1. DIMENSIONS GIVEN IN THE DRAWINGS ARE EXAMPLES; DEVICE SHOULD BE INSTALLED PER MANUFACTURER'S SPECIFICATIONS.
2. SLOPE SURFACE SHALL BE FREE OF ROCKS, CLODS, STICKS AND GRASS. MATS/ BLANKETS SHALL HAVE GOOD SOIL CONTACT.
3. APPLY PERMANENT SEEDING BEFORE PLACING BLANKETS.
4. LAY BLANKETS LOOSELY AND STAKE OR STAPLE TO MAINTAIN DIRECT CONTACT WITH THE SOIL. DO NOT STRETCH.
EROSION BLANKETS SLOPE INSTALLATION
ADAPTED FROM J. McCULLAH 1994

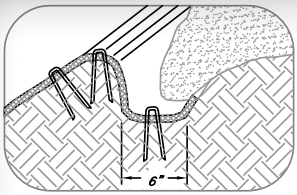

LONGITUDINAL ANCHOR TRENCH

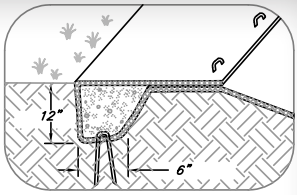

TERMINAL SLOPE AND CHANNEL ANCHOR TRENCH

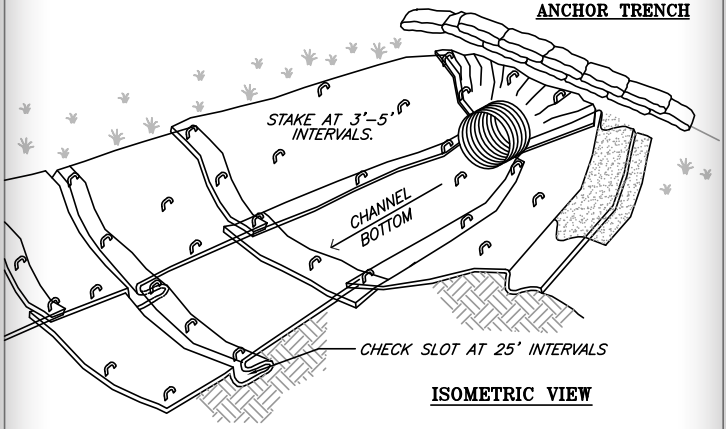

ISOMETRIC VIEW

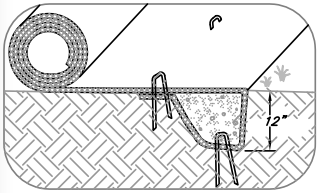

INITIAL CHANNEL ANCHOR TRENCH

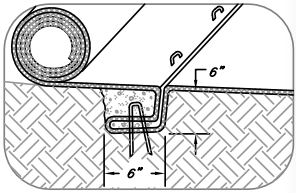

INTERMITTENT CHECK SLOT

NOTES:

1. DIMENSIONS GIVEN IN THE DRAWINGS ARE EXAMPLES; DEVICE SHOULD BE INSTALLED PER MANUFACTURER'S SPECIFICATIONS.
2. CHECK SLOTS TO BE CONSTRUCTED PER MANUFACTURER'S SPECIFICATIONS.
3. STAKING OR STAPLING LAYOUT PER MANUFACTURER'S SPECIFICATIONS.

EROSION BLANKETS
CHANNEL INSTALLATION

ADAPTED FROM J. McCULLAH 1994

DIVERSION

General Description

A diversion is a temporary channel constructed across the slope to intercept runoff and direct it to a stable outlet or to sediment trapping facilities. The channel may be formed by excavation, placement of a berm (or dike), or a combination of these measures. This temporary measure is used immediately above a new cut or soil fill slope or around the perimeter of a disturbed area. Diversions can be used as follows:

- To divert storm runoff from upslope drainage areas away from unprotected disturbed areas and slopes to a stabilized outlet. In this case, the diversion is placed upslope of the construction area.
- To divert sediment-laden runoff from a disturbed area to a sediment-trapping facility such as a sediment trap or sediment basin. In this case, the diversion is placed below the disturbed area, to assure that sediment-laden runoff will not leave the site without treatment.

Diversions are intended to facilitate management of the site during construction, and should not be substituted for terracing, vegetated waterways, permanent land grading practices, and other permanent measures for providing long-term erosion control.

Considerations

- Temporary diversions must be stabilized immediately following installation to prevent erosion of the diversion itself.
- The gradient along the flow path must have a positive grade to assure drainage, but should not be so steep as to result in erosion due to high velocity channel flow. If such erosion occurs during construction, corrective action should be taken to stabilize the channel and berm, flatten the gradient of the channel, or otherwise eliminate the cause of erosion.

- Diversions are typically installed using material available on the site and can usually be constructed with equipment needed for site grading. The useful life of the practice can be extended by stabilizing the dike with vegetation.
- Temporary diversion dikes are often used as a perimeter control in association with a sediment trap or a sediment basin, or a series of sediment-trapping facilities, on moderate to large construction sites. If installed properly and in the first phase of grading, maintenance costs are very low.
- Diversions that are located upslope of a construction area should not themselves be located below high sediment-producing areas unless land treatment practices or structural measures, designed to prevent damaging accumulations of sediment in the channels, are installed with or before the diversions. (The exception is where the diversion is used to divert sediment-laden water to a sedimentation facility.)
- Where diversions carry concentrated flows, their outlets may require treatment or structures to dissipate energy and re-disperse the flow or re-create sheet flow into undisturbed upland areas, where the runoff can be absorbed. Untreated, sediment-laden runoff should not be discharged to such undisturbed areas.

Maintenance Requirements

The measure should be inspected weekly and after every storm of ½ inch or more in a 24-hour period. Repairs should be made to the berm (dike), flow channel, outlet or sediment trapping facility, as necessary.

Diversion Dikes used to trap sediment should be inspected and cleaned out after every significant storm.

Damages caused by construction traffic or other activity must be repaired before the end of each working day.

If inspection indicates vegetation has not been established or has been damaged, the affected areas must be reseeded immediately.

Once diversions have been stabilized, they should be mowed periodically to maintain a healthy vegetative cover, but the grass should not be cut shorter than 4 inches. Diversion ridges can be hazardous to mow, and equipment operators should be made aware of this potential hazard.

Specifications

Design Specifications:

Diversions should be designed to meet the criteria in the following table:

Design Parameter	Criteria
Location	The condition of the outlet area, site topography, ground cover, soil type, and length of slope should determine the location of the diversion.
Drainage Area	< 5 acres
Capacity	2-year, 24 hour design storm conveyance capacity
Design Velocity	2.5 to 4.5 feet/sec, depending on channel lining
Berm or channel side slope	2:1 or flatter
Berm top width	2 feet, minimum
Total depth, top of berm to bottom of channel	1.5 feet maximum, except for berm overfill of approximately 10% of berm height to allow for settlement.
Freeboard	0.5 feet minimum
Channel shape	Parabolic or trapezoidal
Stabilization	Vegetation or riprap
Gradient (along flow path)	Positive grade to outlet. Channels < 2% do not require stabilization unless excessive erosion is observed during routine inspection. Channels > 2% should be stabilized.

Design Parameter	Criteria
Outlet	Sediment laden water must be diverted into sediment trap or sediment basin. Runoff from undisturbed areas must discharge at either a naturally stable outlet, or a stabilized level spreader, apron, or other suitable structure.

Construction Specifications:

- Temporary diversion dikes should be installed as an initial step in the land-disturbing activity. They must be functional prior to exposure of soils in the area being served by the diversion.
- All ditches or gullies within the limits of the diversion should be filled, and trees and other obstructions should be removed before or as part of the construction.
- The dike should be located to minimize damages by construction operations and traffic.
- Where the diversion crosses an underground utility or other structure, measures should be employed to prevent damage to the utility, and to prevent settlement or displacement of trench backfill as a result of the placement of the diversion.
- Once soil is exposed for a diversion channel, it should be immediately shaped, graded and stabilized. The dike should be adequately compacted to prevent failure.
- Temporary or permanent seeding and mulch should be applied to the dike immediately following its construction.
- Diversions must be completely stabilized prior to directing runoff to them.
- Where vegetation is used for stabilization, disturbed areas should be established to grass immediately after construction. Seedbed preparation, seeding, fertilizing, and mulching should comply with Temporary Vegetation and Permanent Vegetation practices described in this manual.

- If the soils or winter conditions preclude the use of vegetation and protection is needed, nonvegetative means, such as erosion control mats or a graded stone lining may be used.
- Each diversion must have an adequate outlet. The outlet must convey runoff to a point where outflow will not cause damage. The outlet should be installed and stabilized before the construction of the diversion.

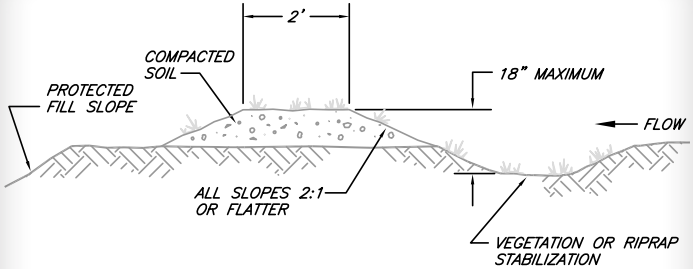

TYPICAL FILL DIVERSION

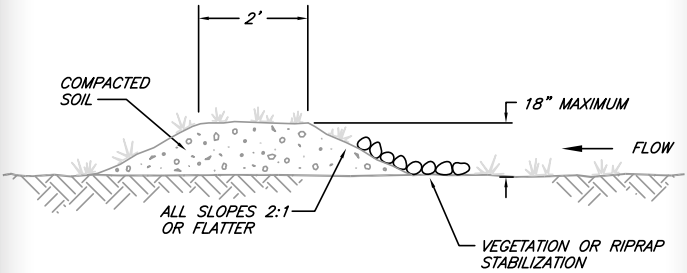

TYPICAL TEMPORARY DIVERSION DIKE

NOTES:
1. THE CHANNEL BEHIND THE DIKE SHALL HAVE POSITIVE GRADE TO A STABILIZED OUTLET.
2. THE DIKE SHALL BE ADEQUATELY COMPACTED TO PREVENT FAILURE.
3. THE DIKE SHALL BE STABILIZED WITH TEMPORARY OR PERMANENT SEEDING OR RIPRAP.

TEMPORARY DIVERSION

ADAPTED FROM J. McCULLAH 1994

SLOPE DRAIN

General Description

A slope drain comprises a pipe, flexible tubing, or other conduit extending from the top to the bottom of a cut or fill slope. During construction, cut and fill slopes are exposed to erosion between the time they are graded and permanently stabilized. During this period, the slopes are very vulnerable to erosion, and temporary slope drains together with temporary diversions can provide valuable protection. The temporary conduit safely conveys runoff down the disturbed face of an embankment without causing erosion. The practice is maintained until the slope has been sufficiently stabilized to enable it to convey runoff by sheet flow or until another practice has been installed to convey concentrated runoff from the top of slope to a safe outlet.

Considerations

Slope drains must be sized, installed, and maintained properly, because their failure will usually result in severe erosion of the slope. Care must be taken to size, install, and maintain the conduit inlet and contributing diversion channel, to prevent failure from overtopping due to inadequate inlet capacity and lack of maintenance of diversion channel capacity and ridge height.

The entrance section to the drain should be well-entrenched and stable so that surface water can enter freely. The drain should extend downslope beyond the toe of the slope to a stable area or appropriately stabilized outlet.

The maximum drainage area per drain should be relatively small and much less than 5 acres.

Maintenance Requirements

- The slope drain structure should be inspected weekly, and after every storm exceeding ½ inch in a 24-hour period. Repairs should be made as necessary.
- The entrance and outlet should be kept clear of sediment and debris. Any scour at the outlet should be repaired immediately, and the outlet stabilized against further erosion.
- The contractor should prevent construction traffic over the slope drain.
- The contractor should avoid the placement of any material on the drain conduit, other than material used to anchor it in place.
- Upon stabilization of the slope, the slope drain should be removed, materials properly disposed, and the disturbed areas stabilized.

Specifications

Site Preparation:

- The slope drain should consist of heavy-duty flexible material designed for this purpose. The segment of drain located on the slope may consist of a sewn geotextile "sock" fabricated for this purpose, or sections of corrugated plastic or corrugated metal pipe.
- The diameter of the slope drain should be the same over its entire length.
- For fabric down drains or open-top chutes, install reinforced, hold-down grommets or stakes to anchor the conduit at intervals not to exceed 10 feet, with the outlet end securely fastened in place.
- CMP or corrugated plastic pipe must have at least one (1) anchor assembly for every 20 feet of slope drain.
- The conduit must extend beyond the toe of the slope.

- Slope drains should be sized according to the following table:

Drainage Area (Acres)	Pipe Diameter, D (Inches)
0.5	12
1.5	18
2.5	21
3.5	24
5.0	30

- The entrance to the slope drain should consist of a standard NHDOT Flared End-Section for Metal Pipe Culverts. A standard T-section fitting may also be used at the inlet, as indicated in the example drawing. An open top flared inlet for overside drain may also be used.
- Extension collars should consist of 12-inch long corrugated metal or corrugated plastic pipe, as required by the type of pipe used on the project. Watertight fittings should be provided.
- An earthen dike should be used to direct stormwater runoff into the temporary slope drain and should be constructed according to the Diversion practice described in this manual.
- The height of the dike at the centerline of the inlet should be equal to the diameter of the pipe (D) plus 12 inches or the height of the diversion dike, whichever is greater. Where the inlet dike height is greater than 18 inches, it should be sloped at the rate of 3:1 or flatter to connect with the adjacent diversion dike.
- The outlet of the slope drain should be protected from erosion by a riprap apron or other accepted practice for energy dissipation and scour protection.

Construction Specifications:

The failure of slope drains is frequently caused by water saturating the soil at the inlet and pipe joints, and then seeping along the outside of the pipe. Proper backfill and compaction at the inlet and

around and under the pipe haunches with stable soil material is essential to prevent this type of failure.

- Place slope drains on undisturbed soil or well-compacted fill at locations and elevations shown on the plans.
- The temporary slope drain should be placed on undisturbed soil or well-compacted fill.
- The entrance section should slope toward the slope drain at the minimum gradient of 1/2 inch per foot.
- The slope of down drain should be at least 5% to minimize sediment deposition within the conduit.
- The maximum slope of down drain should be 1.5:1.
- The soil around and under the entrance section should be hand-tamped in 6-inch lifts to the top of the dike to prevent seepage failure around the inlet.
- Ensure that fill over the drain at the top of the slope has a minimum depth of 12 inches above top of pipe, and a minimum top width of 4 feet. The sides should have a 3:1 slope.
- Ensure that the settled, compacted dike ridge is no less than 1 foot higher than the top of the pipe inlet.
- Securely fasten the exposed section of the drain with grommets or stakes spaced at the specified intervals.
- The slope drain sections should be securely fastened together and have watertight fittings.
- Extend the drain beyond the toe of the slope and adequately protect the outlet from erosion.
- Installation of temporary slope drains should be completed and their outlets protected before runoff is diverted to them.
- Immediately stabilize all disturbed areas following construction of the slope drain.

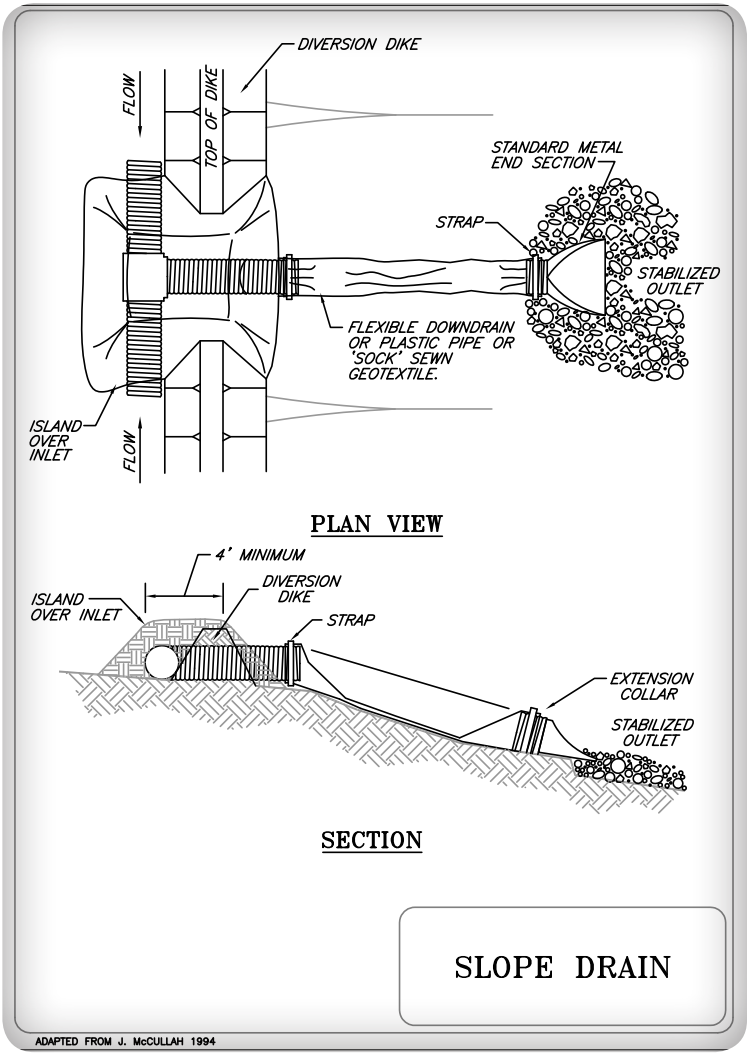
DIVERSION DIKE
FLOW
TOP OF DIKE
STANDARD METAL END SECTION
STRAP
STABILIZED OUTLET
FLEXIBLE DOWNDRAIN OR PLASTIC PIPE OR 'SOCK' SEWN GEOTEXTILE.
ISLAND OVER INLET
FLOW
PLAN VIEW
4' MINIMUM
DIVERSION DIKE
ISLAND OVER INLET
STRAP
EXTENSION COLLAR
STABILIZED OUTLET
SECTION
SLOPE DRAIN
ADAPTED FROM J. McCULLAH 1994

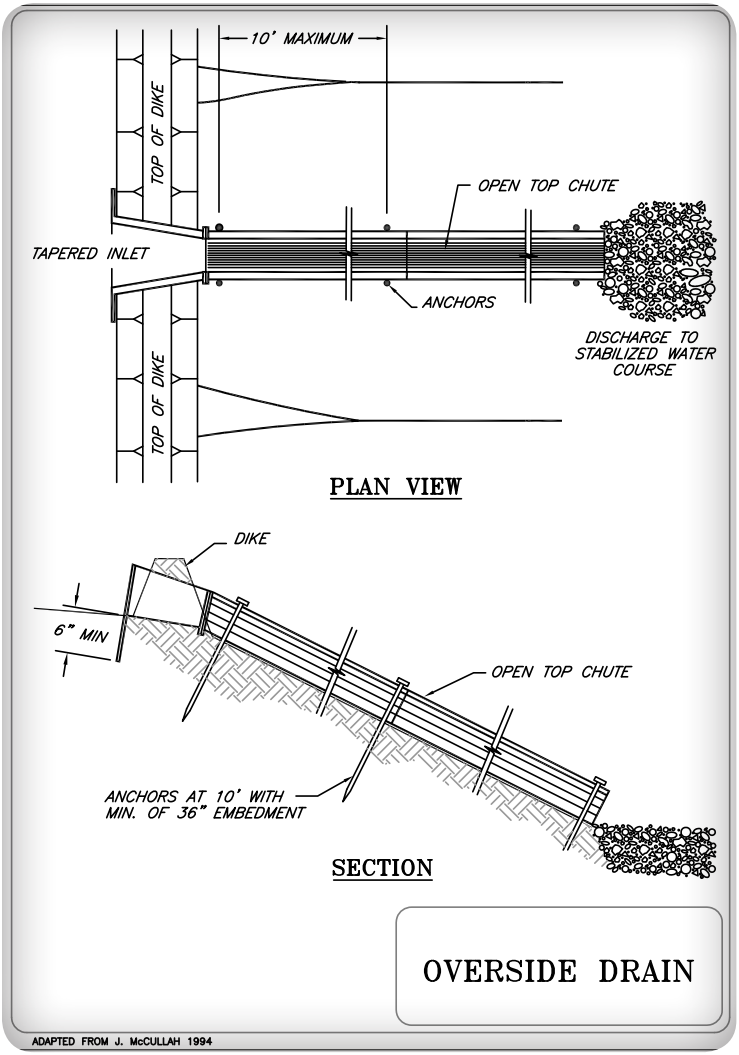
10' MAXIMUM
TOP OF DIKE
OPEN TOP CHUTE
TAPERED INLET
ANCHORS
DISCHARGE TO STABILIZED WATER COURSE
TOP OF DIKE
PLAN VIEW
DIKE
6" MIN
OPEN TOP CHUTE
ANCHORS AT 10' WITH MIN. OF 36" EMBEDMENT
SECTION
OVERSIDE DRAIN
ADAPTED FROM J. McCULLAH 1994

4-2. Sediment Control Practices

The following Sediment Control practices are presented in this Section:

- Silt fence
- Straw or hay bale barrier
- Erosion control mix berms
- Temporary check dam
- Temporary storm drain inlet protection
- Temporary construction exit
- Temporary sediment trap
- Temporary sediment basin
- Construction dewatering
- Flocculants

SILT FENCE

General Description

Silt fence is a temporary sediment barrier consisting of filter fabric attached to supporting posts and entrenched into the soil. This barrier is installed across or at the toe of a slope, to intercept and retain small amounts of sediment from disturbed or unprotected areas.

Silt fences have a useful life of one season. They function primarily to slow and pond the water and allow soil particles to settle. Silt fences are not designed to withstand high heads of water, and therefore should be located where only shallow pools can form. Their use is limited to areas where overland sheet flows are expected.

Silt fence is a sediment control practice, not an erosion control practice. It is intended to be used in conjunction with other practices that do prevent or control erosion. Improperly applied or installed silt fence will increase erosion.

Silt fences should not be used across streams, channels, swales, ditches or other drainage ways. Silt fences are not capable of effectively filtering the high rates and volumes of water associated with channelized flow. Silt fences should not be designed to impound sediment or water more than 18 inches high. Silt fences installed across a concentrated flow path are subject to undercutting, end cutting, and overtopping. This frequently not only results in the bypass of sediment laden-water, but also in the complete failure of the fence. Such failures typically release the sediment accumulated on the upgradient side of the fence, and severe erosion of the channel both upstream and downstream of the fence.

Considerations

- Silt fence barriers are used where:
  - Flow to the silt fence from a disturbed area occurs as overland sheet flow.
  - Sedimentation can pollute or degrade adjacent wetlands or watercourses.
  - Sedimentation will reduce the capacity of storm drainage systems or adversely affect adjacent areas.
  - The contributing drainage area is less than 1/4 acre per 100 feet of barrier length, the maximum length of slope above the barrier is 100 feet, and the maximum gradient behind the barrier is 50 percent (2:1). If any of these conditions are exceeded, other measures may be necessary to control erosion and to intercept and treat the sediment load.
  - Sediment barriers should not be used in areas of concentrated flows. Under no circumstances should silt fences be constructed in streams or in swales where there is the possibility of a washout.
- Silt fences (synthetic filter) can be used for 60 days or longer depending on ultraviolet stability and manufacturer's recommendations. However, silt fences generally have a useful life of one season, and should be periodically replaced on longer duration construction projects.
- Silt fencing generally is a better barrier than hay bale barriers.
- Potential causes of silt fence failure include:
  - Improper placement on the site;
  - Allowing excessive drainage area to the silt fence structure;
  - Inadequate trenching depth and improper backfill and compaction of the bottom of the silt fence fabric;
  - Improper attachment to posts;
  - Inadequate maintenance of the silt fence after installation;

- Installing silt fence with a descending grade along the fence alignment, resulting in the diversion or concentration of runoff.
- Placement of fence at mid-slope of a cut or fill embankment. Because a silt fence works by impounding water, it should be placed at the toe of such slopes, to allow for this function, and to avoid potential diversion or concentration of flows.

Maintenance Requirements

- Fences should be inspected and maintained immediately after each rainfall and at least daily during prolonged rainfall;
- Sediment deposition should be removed, at a minimum, when deposition accumulates to one-half the height of the fence, and moved to an appropriate location so the sediment is not readily transported back toward the silt fence.
- Silt fences should be repaired immediately if there are any signs of erosion or sedimentation below them. If there are signs of undercutting at the center or the edges of the barrier, or impounding of large volumes of water behind them, sediment barriers should be replaced with a temporary check dam.
- Should the fabric on a silt fence decompose or become ineffective prior to the end of the expected usable life and the barrier still is necessary, the fabric should be replaced promptly.
- Any sediment deposits remaining in place after the silt fence is no longer required should be dressed to conform to the existing grade, prepared and seeded.
- If there is evidence of end flow on properly installed barriers, extend barriers uphill or consider replacing them with other measures, such as temporary diversions and sediment traps.
- Silt fences have a useful life of one season. On longer construction projects, silt fence should be replaced periodically as required to maintain effectiveness.

Specifications

Fences should be used in areas where erosion will occur only in the form of sheet erosion and there is no concentration of water in a channel or drainage way above the fence. Sediment barriers should be installed prior to any soil disturbance of the contributing drainage area above them.

- The maximum contributing drainage area above the fence should be less than ¼ acre per 100 linear feet of fence;
- The maximum length of slope above the fence should be 100 feet;
- The maximum slope above the fence should be 2:1;
- Fences should be installed following the contour of the land as closely as possible, and
    - The ends of the fence should be flared upslope;
    - The fabric should be embedded a minimum of 4 inches in depth and 4 inches in width in a trench excavated into the ground, or if site conditions include frozen ground, ledge, or the presence of heavy roots, the base of the fabric should be embedded with a minimum thickness of 8 inches of ¾-inch stone;
    - The soil should be compacted over the embedded fabric;
    - Support posts should be sized and anchored according to the manufacturer's instructions with maximum post spacing of 6 feet;
    - Adjoining sections of the fence should be overlapped by a minimum of 6 inches (24 inches is preferred), folded and stapled to a support post. If metal posts are used, fabric should be wire-tied directly to the posts with three diagonal ties.
- Silt fencing should not be stapled or nailed to trees.
- The filter fabric should be a pervious sheet of propylene, nylon, polyester or ethylene yarn and should be certified by the manufacturer or supplier.

- The filter fabric should contain ultraviolet ray inhibitors and stabilizers to provide a minimum of 6 months of expected usable construction life at a temperature range of 0 degrees Fahrenheit to 120 degrees Fahrenheit.
- Posts for silt fences should be either 4-inch diameter wood or 1.33 pounds per linear foot steel with a minimum length of 5 feet. Steel posts should have projections for fastening wire to them. Posts should be placed on the downslope side of the fabric.
- The height of a silt fence should not exceed 36 inches as higher fences may impound volumes of water sufficient to cause failure of the structure.
- The filter fabric should be purchased in a continuous roll cut to the length of the barrier to avoid the use of joints. When joints are necessary, filter cloth should be spliced together only at support post, with a minimum 6-inch overlap, and securely sealed.
- A manufactured silt fence system with integral posts may be used.
- Post spacing should not exceed 6 feet.
- A trench should be excavated approximately 4 inches wide and 4 inches deep along the line of posts and upgradient from the barrier.
- The standard strength of filter fabric should be stapled or wired to the post, and 8 inches of the fabric should be extended into the trench. The fabric should not extend more than 36 inches above the original ground surface.
- The trench should be backfilled and the soil compacted over the filter fabric.
- Silt fence may be installed by “slicing” using mechanical equipment specifically designed for this procedure. The slicing method uses an implement towed behind a tractor to “plow” or slice the silt fence material into the soil. The slicing method minimally disrupts the soil upward and slightly displaces the

soil, maintaining the soil's profile and creating an optimal condition for subsequent mechanical compaction.

- Silt fences should be installed with "smiles" or "J-hooks" to reduce the drainage area that any segment will impound (see diagrams).
- The ends of the fence should be turned uphill.
- Silt fences placed at the toe of a slope should be set at least 6 feet from the toe to allow space for shallow ponding and to allow for maintenance access without disturbing the slope.
- Silt fences should be removed when they have served their useful purpose, but not before the upslope areas have been permanently stabilized.

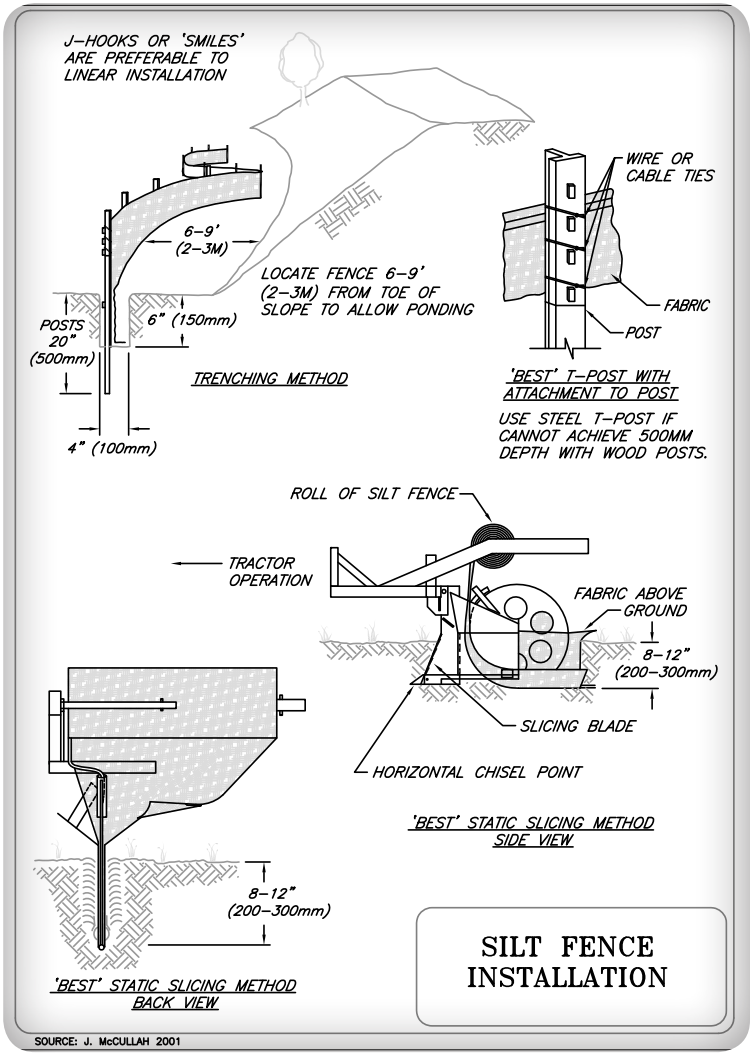
J–HOOKS OR 'SMILES' ARE PREFERABLE TO LINEAR INSTALLATION
6–9' (2–3M)
LOCATE FENCE 6–9' (2–3M) FROM TOE OF SLOPE TO ALLOW PONDING
POSTS 20" (500mm)
6" (150mm)
TRENCHING METHOD
4" (100mm)
WIRE OR CABLE TIES
FABRIC
POST
'BEST' T–POST WITH ATTACHMENT TO POST
USE STEEL T–POST IF CANNOT ACHIEVE 500MM DEPTH WITH WOOD POSTS.
ROLL OF SILT FENCE
TRACTOR OPERATION
FABRIC ABOVE GROUND
8–12" (200–300mm)
SLICING BLADE
HORIZONTAL CHISEL POINT
'BEST' STATIC SLICING METHOD SIDE VIEW
8–12" (200–300mm)
'BEST' STATIC SLICING METHOD BACK VIEW
SILT FENCE INSTALLATION
SOURCE: J. McCULLAH 2001

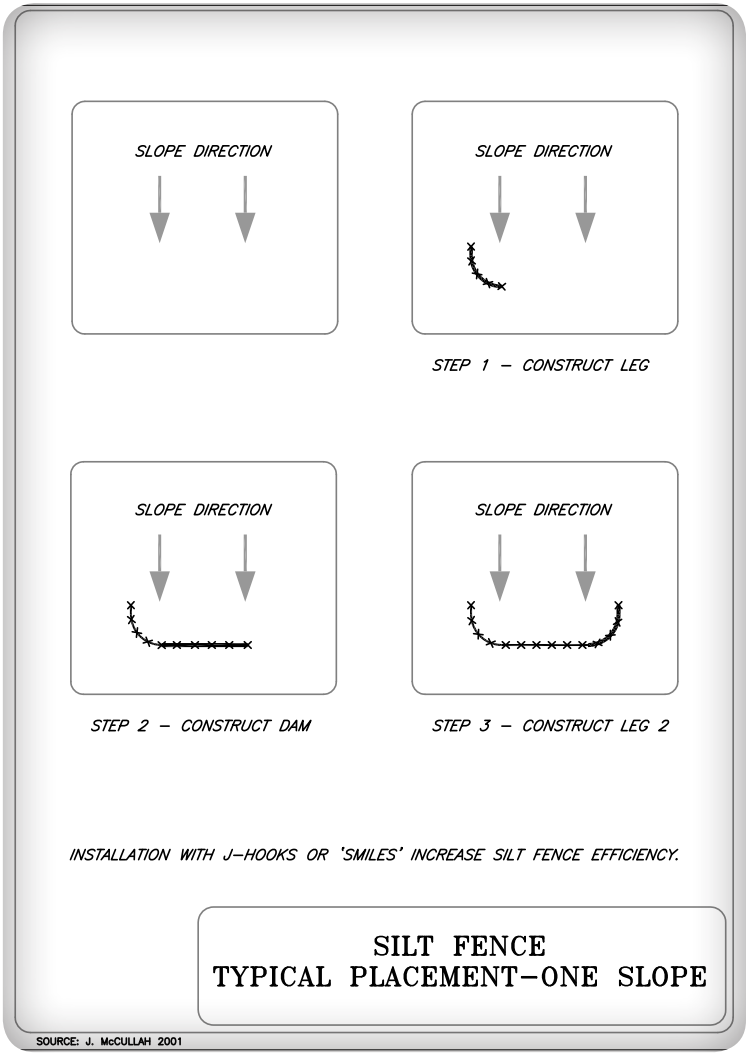
SLOPE DIRECTION
SLOPE DIRECTION
STEP 1 – CONSTRUCT LEG
SLOPE DIRECTION
SLOPE DIRECTION
STEP 2 – CONSTRUCT DAM
STEP 3 – CONSTRUCT LEG 2
INSTALLATION WITH J–HOOKS OR 'SMILES' INCREASE SILT FENCE EFFICIENCY.
SILT FENCE
TYPICAL PLACEMENT–ONE SLOPE
SOURCE: J. McCULLAH 2001

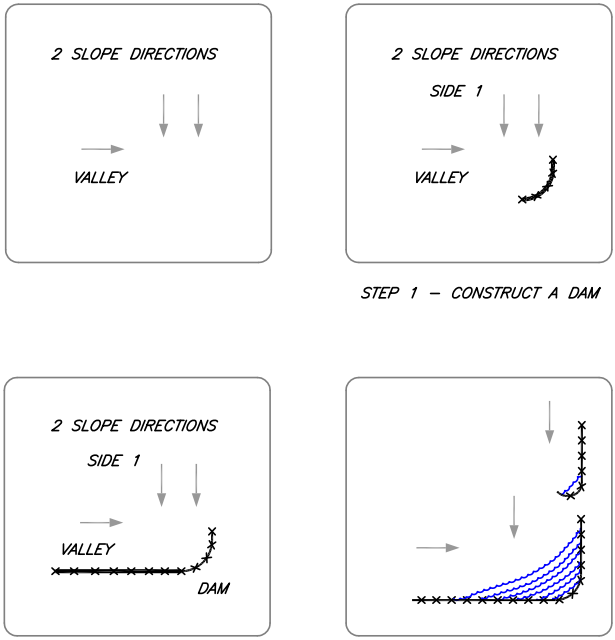

INSTALLATION WITH J–HOOKS WILL INCREASE SILT FENCE EFFICIENCY AND REDUCE EROSION–CAUSING FAILURES.

SILT FENCE
TYPICAL PLACEMENT–TWO SLOPES

SOURCE: J. McCULLAH 2001

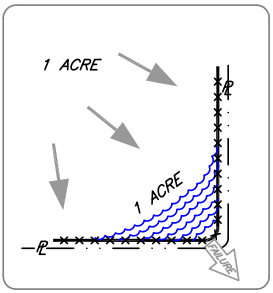

Incorrect – Do Not layout "perimeter control" silt fences along property lines. All sediment laden runoff will concentrate and overwhelm the system.

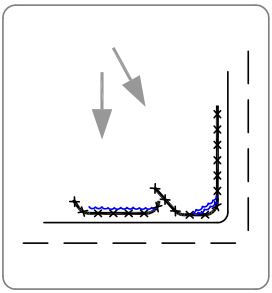

Correct – Install J–hooks

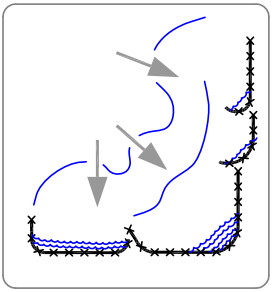

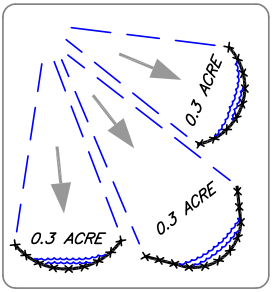

Discreet segments of silt fence, installed with J–hooks or 'smiles' will be much more effective.

SILT FENCE PLACEMENT FOR PERIMETER CONTROL

SOURCE: J. McCULLAH 2001

STRAW OR HAY BALE BARRIER

General Description

Straw and hay bale barriers are a type of temporary sediment barrier installed across or at the toe of a slope, to intercept and retain small amounts of sediment from disturbed or unprotected areas.

Straw or hay bale barriers have a useful life of less than six months. They function primarily to slow and pond the water and allow soil particles to settle. They are not designed to withstand high heads of water, and therefore should be located where only shallow pools can form. Their use is limited to areas that only contribute sheet flow to the device.

Straw or hay bale barriers constitute a sediment control practice, not an erosion control practice. The must be used in conjunction with other practices that do prevent or control erosion. Improperly applied or installed sediment barriers will increase erosion.

Straw or hay bale barriers should generally not be used across streams, channels, swales, ditches or other drainage ways or areas with concentrated flows. Such barriers are not capable of effectively filtering the high rates and volumes of water associated with channelized flow. However, they may be used for check dams in applications where installation access or other conditions prevent the use of preferred materials such as stone; in such cases, installation must provide proper embedment of the straw or hay bale barrier, limit contributing drainage area to less than an acre, and provide for frequent monitoring of the barrier. Straw or hay bale barriers installed across a concentrated flow path are subject to undercutting, end cutting, and overtopping. This frequently not only results in the bypass of sediment laden-water, but also in the complete failure of the barrier. Such failures typically release the sediment accumulated on the upgradient side of the barrier, and severe erosion of the channel both upstream and downstream of the device.

Considerations

- Straw or hay bale barriers principally trap sediment by temporarily ponding water, allowing particles to settle. These barriers are not designed to withstand high heads of water; therefore they should be located where only shallow pools can form. Straw or hay bale barriers are used where:
    - Flow to the barrier from a disturbed area occurs as overland sheet flow.
    - Sedimentation can pollute or degrade adjacent wetlands or watercourses.
    - Sedimentation will reduce the capacity of storm drainage systems or adversely affect adjacent areas.
    - The contributing drainage area is less than 1/4 acre per 100 feet of barrier length, the maximum length of slope above the barrier is 100 feet, and the maximum gradient behind the barrier is 50 percent (2:1). If any of these conditions are exceeded, other measures may be necessary to control erosion and to intercept and treat the sediment load.
    - Sediment barriers should not be used in areas of concentrated flows. However, they may be used for check dams in applications where installation access or other conditions prevent the use of preferred materials such as stone; in such cases, installation must provide proper embedment of the straw or hay bale barrier, limit contributing drainage area to less than one acre, and provide for frequent monitoring of the barrier. Under no circumstances should sediment barriers be constructed in live streams or in swales where there is the possibility of a washout.
- Straw or hay bales should only be used as a temporary barrier for no longer than 60 days.
- Potential causes of straw or hay bale barrier failure include:
    - Improper placement on the site;

- Allowing excessive drainage area to the barrier;
- Inadequate keying of the bales into the ground surface;
- Inadequate maintenance after installation;

Maintenance Requirements

- Hay bale barriers should be inspected immediately after each rainfall and at least daily during prolonged rainfall.
- Barriers should be repaired immediately if there are any signs of erosion or sedimentation below them. If there are signs of undercutting at the center or the edges of the barrier, or impounding of large volumes of water behind the barrier, the barrier should be replaced with an alternative measure to intercept and capture sediment (for example, a diversion berm directing sediment-laden runoff to a sediment trap or basin).
- Damaged or decomposed bales should be replaced promptly.
- Sediment deposits should be removed after each storm event. They must be removed when deposits reach approximately one-half the height of the barrier.
- Any sediment deposits remaining in place after the filter barrier is no longer required should be dressed to conform to the existing grade, prepared and seeded.

Specifications

- Sediment barriers should be installed prior to any soil disturbance of the contributing drainage area above them.
- Bales should be placed in a single row, lengthwise on the contour, with ends of adjacent bales tightly abutting one another. The ends of the barrier should be flared up slope.
- Barriers should not be constructed more than one bale high.
- All bales should be either wire-bound or string-tied. Bales should be installed so that bindings are oriented around the

sides, parallel to the ground surface to prevent deterioration of the bindings.

- The barrier should be entrenched and backfilled. A trench should be excavated the width of a bale and the length of the proposed barrier to a minimum depth of 4 inches.
- After the bales are staked and chinked, the excavated soil should be backfilled against the barrier. Backfill soil should conform to the ground level on the downhill side and should be built up 4 inches against the uphill side of the barrier. Ideally, bales should be placed 10 feet away from the toe of slope.
- At least two stakes driven through the bale and penetrating at least 18 inches into the ground, should securely anchor each bale. The first stake in each bale should be driven toward the previously laid bale to force the bales together. Stakes should be driven deep enough into the ground to securely anchor the bales.
- The gaps between bales should be chinked (filled by wedging) with hay to prevent water from escaping between the bales.
- Inspection should be frequent and repair or replacement should be made promptly as needed. Bale barriers should be removed when they have served their usefulness, but not before the upslope areas have been permanently stabilized.

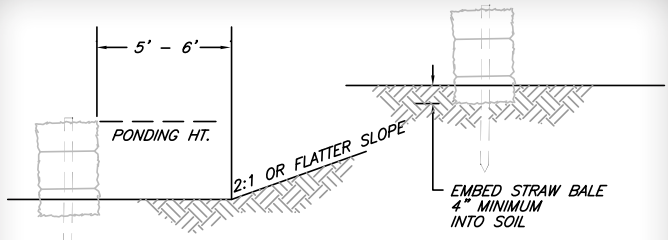

SECTION A – A

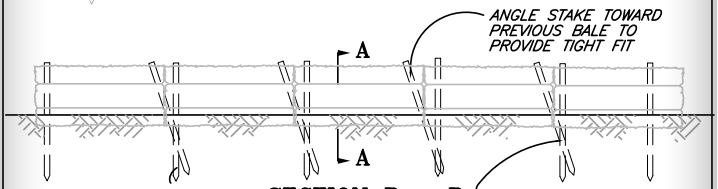

SECTION B – B

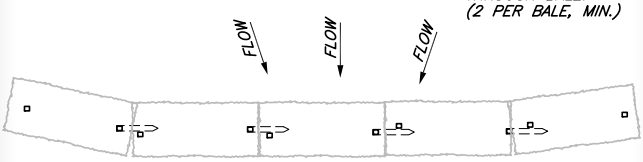

PLAN

NOTES:

1. THE BALES SHALL BE PLACED ON SLOPE CONTOUR.
2. BALES TO BE PLACED IN A ROW WITH THE ENDS TIGHTLY ABUTTING.
3. KEY IN BALES TO PREVENT EROSION OR FLOW UNDER BALES.
4. REFER TO DESCRIPTION OF "SILT FENCE" FOR DIAGRAMS ILLUSTRATING PLACEMENT OF BARRIERS FOR EFFECTIVE SEDIMENT CONTROL.

STRAW OR HAY BALE BARRIER

ADAPTED FROM J. McCULLAH 1994

EROSION CONTROL MIX BERMS

General Description

An erosion control mix berm is a trapezoidal berm that intercepts sheet flow and ponds runoff, allowing sediment to settle, and filtering sediment as well. They are an environmentally sensitive and cost-effective alternative to silt fence. An alternative to a simple erosion control mix berm is a "continuous contained berm", consisting of erosion control mix compost encapsulated in a mesh fabric (or "filter sock").

This barrier is installed across or at the toe of a slope, to intercept and retain small amounts of sediment from disturbed or unprotected areas.

Erosion control mix berms and socks sometimes offer a better solution than silt fence and other sediment control methods, because the organic material does not require any special trenching, construction, or removal, unlike straw bales, silt fence or coir rolls. This makes the technique very cost-effective.

The erosion control mix is organic, biodegradable, renewable, and can be left onsite. This is particularly important below embankments near streams, as re-entry to remove or maintain a synthetic barrier can cause additional disturbance. Silt fence has to be disposed of as a solid waste, and is often left abandoned on job sites.

Erosion control mix berms can be easily and quickly fixed, if they are disturbed in the course of construction activity.

Considerations

The berm is used where:

- Sedimentation can pollute or degrade adjacent wetland and/or watercourses.
- Sedimentation will reduce the capacity of storm drainage systems or adversely affect adjacent areas.
- The contributing drainage area is less than 1/4 acre per 100 feet of barrier length, the maximum length of slope above the barrier is 100 feet, and the maximum gradient behind the barrier is 5 percent. If the slope length is greater, other measures such as diversions may be necessary to reduce the slope length.
- Sediment barriers should not be used in areas of concentrated flows. Under no circumstances should erosion control mix barriers be constructed in live streams or in swales where there is the possibility of a washout.
- Sediment barriers are effective only if installed and maintained properly.
- Sediment barriers should be installed prior to any soil disturbance of the contributing drainage area above them.
- Frozen ground, outcrops of bedrock and very rooted forested areas are locations where berms of erosion control mix are most practical and effective.
- Other BMPs should be used at low points of concentrated runoff, below culvert outlet aprons, around catch basins and closed storm systems, and at the bottom of steep perimeter slopes.

Maintenance Requirements

- Filter berms should be inspected immediately after each rainfall and at least daily during prolonged rainfall. They should be repaired immediately if there are any signs of erosion or sedimentation below them. If there are signs of breaching of the barrier, or impounding of large volumes of water behind them, then they should be replaced with other measures to intercept and trap sediment (such as a diversion berm directing runoff to a sediment trap or basin).
- Sediment deposits should be removed after each storm event. They must be removed when deposits reach approximately one-third of the height of the barrier.
- Filter berms should be reshaped or reapplied as needed.
- Any sediment deposits remaining in place after the barrier is no longer required should be dressed to conform to the existing grade, prepared and seeded.

Specifications

Erosion control mix can be manufactured on or off the project site. It must consist primarily of organic material, separated at the point of generation, and may include shredded bark, stump grindings, composted bark, or acceptable manufactured products. Wood and bark chips, ground construction debris or reprocessed wood products will not be acceptable as the organic component of the mix.

- Composition of the erosion control mix should be as follows:
    - Erosion control mix should contain a well-graded mixture of particle sizes and may contain rocks less than 4” in diameter. Erosion control mix must be free of refuse, physical contaminants, and material toxic to plant growth. The mix composition should meet the following standards:
    - The organic matter content should be between 25 and 65%, dry weight basis.

- Particle size by weight should be 100% passing a 3“ screen, 90% to 100% passing a 1-inch screen, 70% to 100% passing a 0.75-inch screen, and a maximum of 30% to 75%, passing a 0.25-inch screen.
- The organic portion needs to be fibrous and elongated.
- The mix should not contain silts, clays or fine sands.
- Soluble salts content should be < 4.0 mmhos/cm.
- The pH should be between 5.0 and 8.0.

- The barrier must be placed along a relatively level contour. It may be necessary to cut tall grasses or woody vegetation to avoid creating voids and bridges that would enable fines to wash under the barrier through the grass blades or plant stems.
- The barrier must be a minimum of 12” high, as measured on the uphill side of the barrier, and a minimum of two feet wide.

Continuous Contained Berms

An alternative product, the continuous contained berm (or “filter sock”), can be an effective sediment barrier as it adds containment and stability to a berm of erosion control mix. The organic mix is placed in the synthetic tubular netting and performs as a sturdy sediment barrier that is highly durable. It especially works well in areas where trenching is not feasible such as over frozen ground or over pavement. See the detail drawing in this section for the installation of continuous contained berms. Seeds may be added to the organic filler material and can permanently stabilize a shallow slope. The containment will provide stability while vegetation is rooting through the netting.

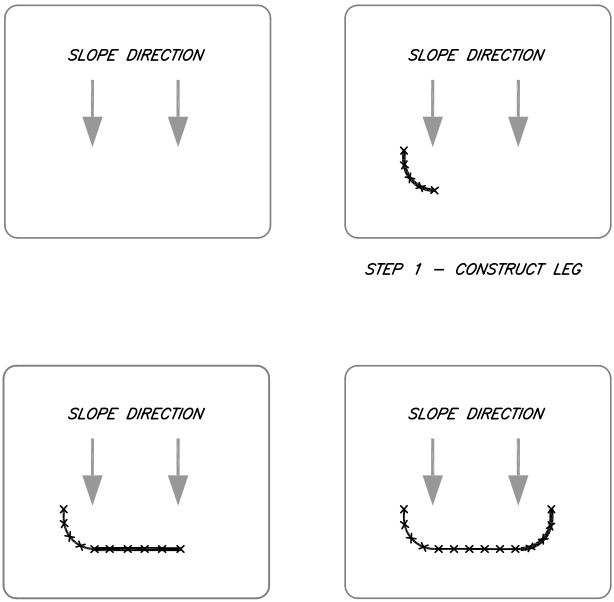

INSTALLATION WITH J–HOOKS OR 'SMILES'
INCREASES EROSION CONTROL MIX BERM EFFICIENCY.

EROSION CONTROL MIX BERM
TYPICAL PLACEMENT–ONE SLOPE

ADAPTED FROM J. McCULLAH 2002

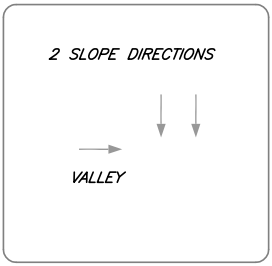

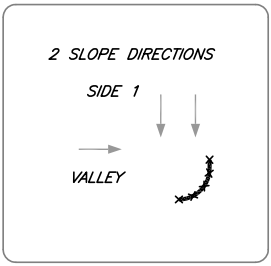

STEP 1 – CONSTRUCT A DAM

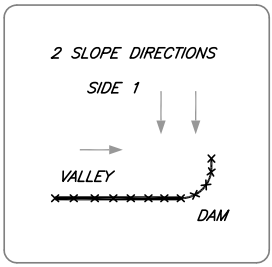

STEP 2 – CONSTRUCT SIDE 2

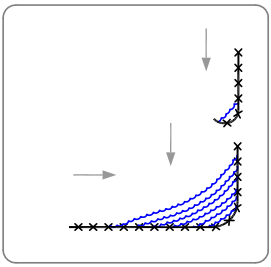

STEP 3 – CONSTRUCT J–HOOKS AS NEEDED

INSTALLATION WITH J–HOOKS WILL INCREASE EROSION CONTROL MIX BERM EFFICIENCY AND REDUCE EROSION–CAUSING FAILURES.

EROSION CONTROL MIX BERM
TYPICAL PLACEMENT–TWO SLOPES

ADAPTED FROM J. McCULLAH 2002

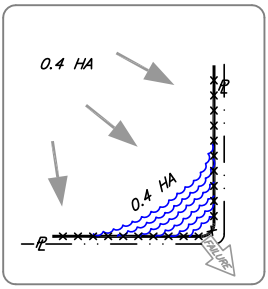

Incorrect – Do Not layout "perimeter control" erosion control mix berms along property lines. All sediment laden runoff will concentrate and overwhelm the system.

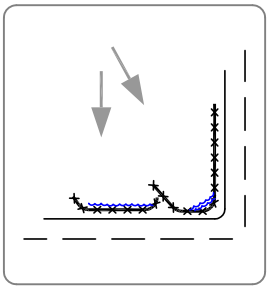

<u>Correct</u> – Install J–hooks

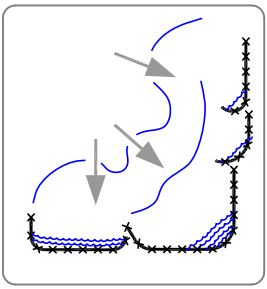

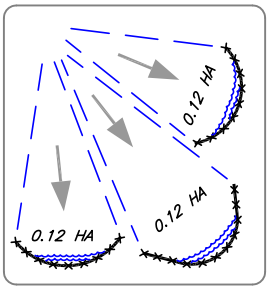

Discreet segments of compost berms, installed with J–hooks or 'smiles' will be much more effective.

EROSION CONTROL MIX
BERM PLACEMENT
FOR PERIMETER CONTROL

ADAPTED FROM J. McCULLAH 2002

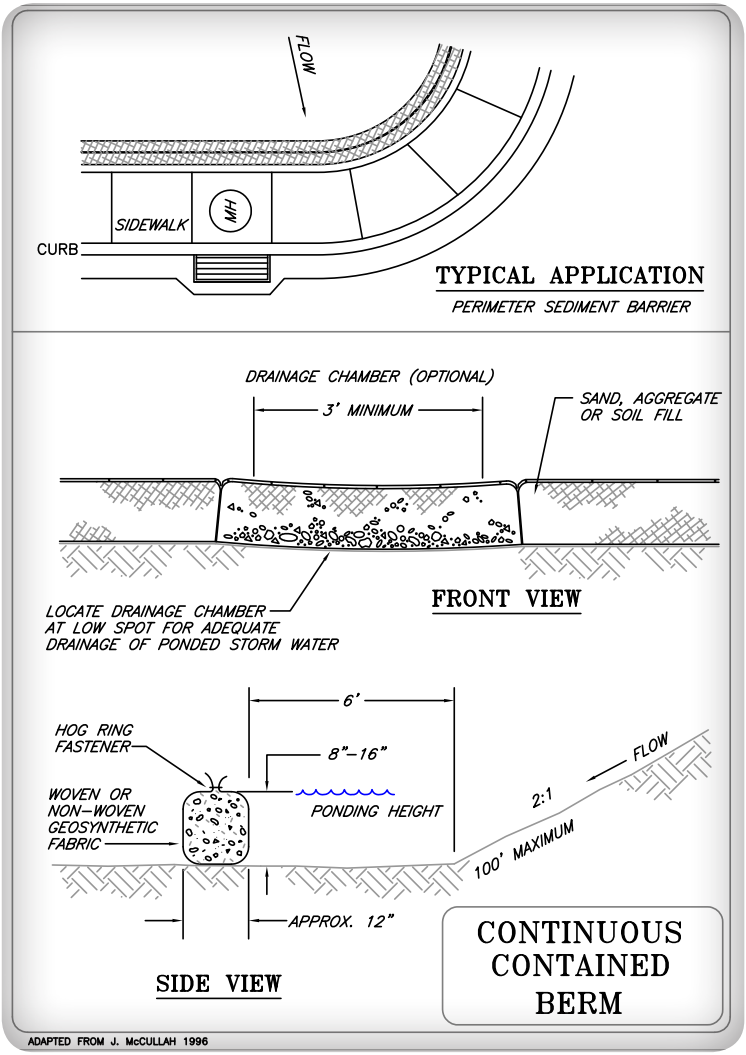
FLOW
SIDEWALK
HH
CURB
TYPICAL APPLICATION
PERIMETER SEDIMENT BARRIER
DRAINAGE CHAMBER (OPTIONAL)
3' MINIMUM
SAND, AGGREGATE OR SOIL FILL
FRONT VIEW
LOCATE DRAINAGE CHAMBER AT LOW SPOT FOR ADEQUATE DRAINAGE OF PONDED STORM WATER
6'
HOG RING FASTENER
8"–16"
WOVEN OR NON–WOVEN GEOSYNTHETIC FABRIC
PONDING HEIGHT
2:1
FLOW
100' MAXIMUM
APPROX. 12"
SIDE VIEW
CONTINUOUS CONTAINED BERM
ADAPTED FROM J. McCULLAH 1996

TEMPORARY CHECK DAMS

General Description

Temporary check dams are small temporary dams constructed across a swale or drainage ditch. Check dams are used to reduce the velocity of concentrated stormwater flows, thereby reducing erosion of the swale or ditch.

Check dams may also trap small amounts of sediment generated in the ditch itself. However, the check dam is not a sediment trapping practice and should not be used as such.

The practice is limited to use in small open channels that drain one acre or less. It should **not** be used in either perennially flowing streams or intermittent stream channels.

Check dams can be constructed of stone. In locations where stone is not available, timber check dams may be considered. Typical applications include temporary or permanent ditches or swales, which need protection during the establishment of grass linings.

Hay or straw bales should generally not be used as check dams, or in any location where there is concentrated flow. However, they may be used for check dams in applications where installation access or other conditions prevent the use of preferred materials such as stone; in such cases, installation must provide proper embedment of the straw or hay bale barrier, limit contributing drainage area to less than one acre, and provide for frequent monitoring of the barrier.

Considerations

- This practice is intended for use in areas of concentrated flow, but must not be used in stream channels (whether perennial or intermittent).
- The check dam may be left in place permanently to avoid unnecessary disturbance of the soil on removal, but only if the project design has accounted for their hydraulic performance and construction plans call for them to be retained.
- If it is necessary to remove a stone check dam from a grass-lined channel that will be mowed, care should be taken to ensure that all stones are removed. This includes stone that has washed downstream.

Maintenance Requirements

- Check dams should be inspected after each rainfall and at least daily during prolonged rainfall and necessary repairs should be made immediately.
- Inspections should verify that the center of the dam is lower than the edges.
- Erosion caused by high flows around the edges of the dam must be corrected immediately.
- If evidence of siltation in the water is apparent downstream from the check dam, the check dam should be inspected and adjusted immediately.
- Check dams should be checked for sediment accumulation after each significant rainfall. Sediment should be removed when it reaches one half of the original height or before.

Specifications

Temporary check dams should conform to the following requirements:

- Check dams should be installed before runoff is directed to the swale or drainage ditch.
- The maximum contributing drainage area to the dam should be less than one acre.
- The maximum height of the dam should be 2 feet.
- The center of the dam should be at least 6 inches lower than the outer edges.
- The maximum spacing between the dams should be such that the toe of the upstream dam is at the same elevation as the overflow elevation of the downstream dam.
- The check dam should not be used in a flowing stream.
- Stone check dams should be constructed of a well-graded angular 2-inch to 3-inch stone. ¾-inch stone on the upgradient face is recommended for better filtering.
- If carefully installed and monitored, timber check dams may be used, and should be constructed of 4-inch to 6-inch logs embedded at least 18 inches deep into the soil. However, stone check dams are generally preferred. The stone has the ability to conform to the channel and settle if scour occurs, rendering stone check dams less susceptible to scour around the ends and downstream of the devices.
- If provided by design and construction plans, leave the dam in place permanently.
- Temporary structures should be removed once the swale or ditch has been stabilized:
    - In temporary ditches and swales, check dams should be removed and the ditch filled in when it is no longer needed.
    - In permanent structures, check dams should be removed when a permanent lining has been established. If the

permanent lining is vegetation, then the check dam should be retained until the grass has matured to protect the ditch or swale. The area beneath the check dam must be seeded and mulched immediately after removal.

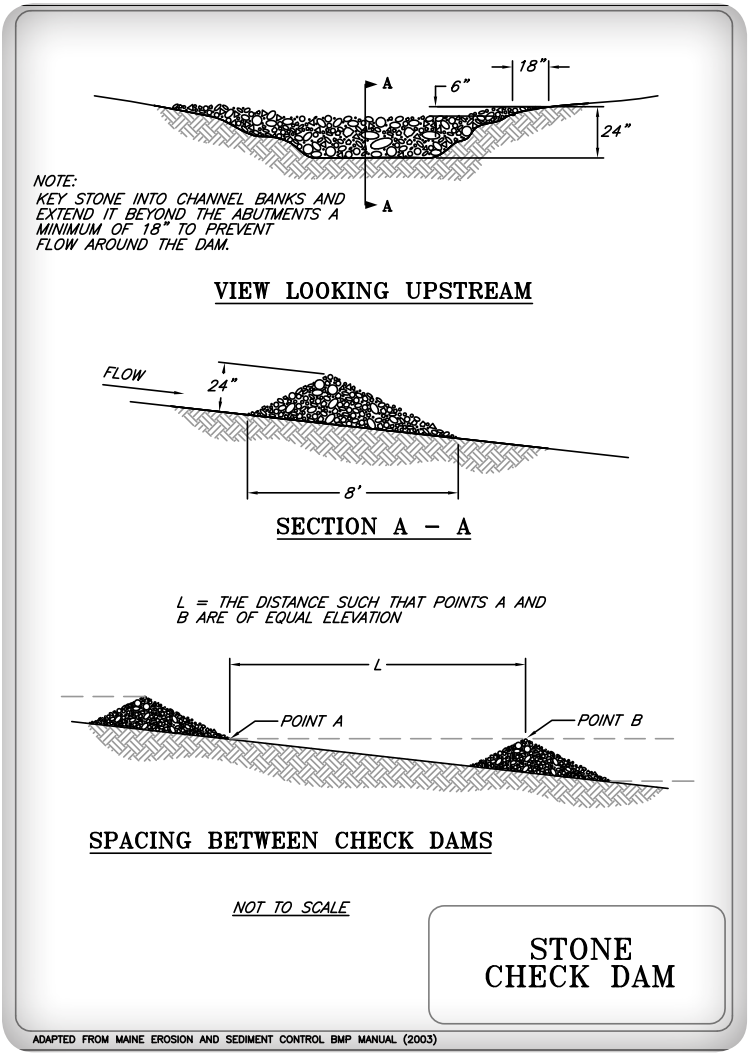

TEMPORARY STORM DRAIN INLET PROTECTION

General Description

A storm drain inlet protection is a sediment barrier installed around a storm Drain drop inlet or curb inlet to reduce sediment discharge. The sediment barrier may be constructed of gravel and wire mesh, or concrete blocks and gravel. Sediment removal is accomplished by shallow ponding adjacent to the barrier and resulting settling of the sediment particles. Temporary storm drain inlet protection using stone and wire will not prevent fine sediment from entering a storm drain. This technique is intended as a secondary sediment area as it will only trap the coarser particles. If turbid water is being directed to this structure and that water does not continue to a sediment trap or basin, alternative solutions for treating the water should be evaluated upslope of the catch basin.

The purpose of storm drain inlet protection is to prevent sediment from entering a storm drainage system prior to permanent stabilization of the contributing disturbed area. Storm drains made operational before their drainage areas are stabilized can convey large amounts of sediment to storm sewer systems or natural drainage ways. In some cases, the storm drain itself may accumulate sufficient sediment to significantly reduce or eliminate its conveyance capacity. To avoid these problems, it is necessary to prevent sediment from entering the system at the inlets.

Considerations

- This practice applies primarily to enclosed drainage systems.
- This practice includes several types of inlet barriers, the use of which may depend on site conditions and the type of inlet. Other techniques for accomplishing the same purpose may be used, but they should be installed only after careful study of their effectiveness.
- This practice is effective in reducing coarse grain suspended particles from runoff. Silt and clay particles will bypass the inlet protection.
- The inlet protection practices are for drainage areas of **less than one acre**. Runoff from large disturbed areas should be routed through a sediment trap or sediment basin.
- The best way to prevent sediment from entering the storm sewer system is to stabilize the site as quickly as possible, preventing erosion and stopping sediment at its source.

Maintenance Requirements

- Inlet barriers should be inspected before and after each rain event and repaired as needed.
- Sediment should be removed and the storm drain sediment barrier restored to its original dimensions when the sediment has accumulated to 1/2 the design depth of the barrier. Removed sediment should be deposited in a suitable area and in such a manner that it will not erode.
- The barriers should be removed and the area stabilized when the contributing drainage area has been properly stabilized.
- All catch basins and storm drain inlets must be cleaned at the end of construction and after the site has been fully stabilized.

Specifications

- The maximum contributing drainage area to the trap should be less than one acre;
- The inlet protection device should be constructed in a manner that will facilitate Clean-out and disposal of trapped sediments and minimize interference with construction activities.
- Any resultant ponding of stormwater must not cause excessive inconvenience or damage to adjacent areas or structures.
- Gravel and wire mesh inlet barriers should meet the following additional requirements:
    - This type of barrier has no overflow provision; therefore, ponding at the inlet may be significantly greater in depth than with other barriers, especially if sediment is not removed regularly. This type of barrier should not be used where overflow may endanger an exposed fill slope. Consideration should also be given to the possible effects of ponding on traffic movement, nearby structures, working areas, and adjacent property.
    - The wire mesh should be placed over the drop inlet so that the entire opening and a minimum of 12 inches around the opening are covered by the mesh;
    - The wire mesh should be hardware cloth or wire with openings up to one half inch;
    - The gravel filter should be clean coarse aggregate;
    - The gravel should be at least 18 inches on all sides of the drain opening; and
    - The gravel should be at least 12 inches in depth.
    - If the stone filter becomes clogged with sediment so that it no longer adequately performs its function, the stones must be pulled away from the inlet, cleaned and replaced.
- Concrete block and gravel inlet barriers should meet the following additional requirements:

- The blocks should be placed lengthwise in a single row around the perimeter of the inlet;
- The block ends should abut one another;
- The height of the barrier can be varied, depending on design needs, by stacking combinations of 4-inch, 8-inch and 12-inch wide blocks. The barrier of blocks and gravel filter should be a minimum of 12 inches high and no more than 24 inches high.
- A hardware cloth or wire mesh should be placed over the openings of the concrete blocks and extend at least 12 inches around the opening to prevent aggregate from being transported through the openings in the blocks. Hardware cloth or comparable wire mesh with 1/2-inch openings should be used.
- The gravel filter should be clean coarse aggregate;
- The gravel should be placed against the wire and along the outside edges of the blocks to the top of the block barrier.
- If the stone filter becomes clogged with sediment so that it no longer adequately performs its function, the stone must be pulled away from the blocks, cleaned and replaced.

Manufactured Sediment Barriers

Manufactured sediment barriers are now available that could be functionally equivalent to the barriers listed above. These measures are acceptable as long as they are installed, used, and maintained as specified by the vendor or manufacturer, and prevent sediment from entering the storm drain system. If such products fail to perform the required sediment trapping function, they should be removed and replaced with an effective alternative barrier.

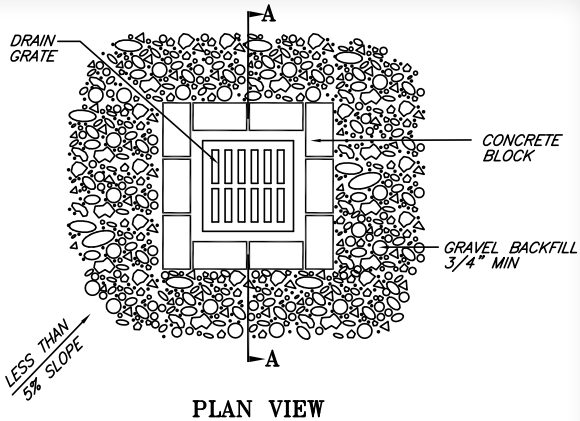

PLAN VIEW

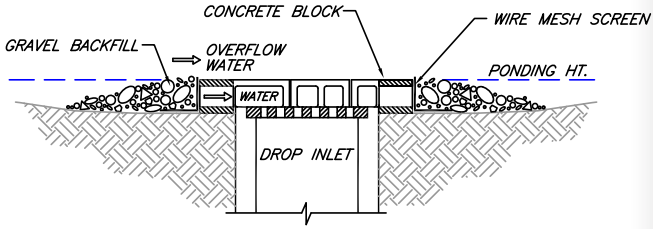

SECTION A – A

NOTES:

1. DROP INLET SEDIMENT BARRIERS ARE TO BE USED FOR SMALL, NEARLY LEVEL DRAINAGE AREAS. (LESS THAN 5%)
2. EXCAVATE A BASIN OF SUFFICIENT SIZE ADJACENT TO THE DROP INLET.
3. THE TOP OF THE STRUCTURE (PONDING HEIGHT) MUST BE WELL BELOW THE GROUND ELEVATION DOWNSLOPE TO PREVENT RUNOFF FROM BYPASSING THE INLET. A TEMPORARY DIKE MAY BE NECESSARY ON THE DOWNSLOPE SIDE OF THE STRUCTURE.

CONCRETE BLOCK AND GRAVEL DROP INLET SEDIMENT BARRIER

ADAPTED FROM J. McCULLAH 1994

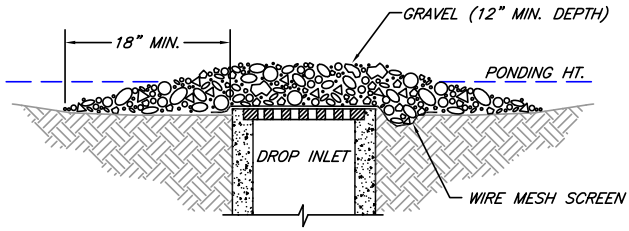

PROFILE

GRAVEL & WIRE MESH
DROP INLET
SEDIMENT BARRIER

ADAPTED FROM: MINNICK & MARSHALL, 1992

TEMPORARY CONSTRUCTION EXIT

General Description

A stabilized construction exit consists of a pad of stone aggregate placed on a geotextile filter fabric, located at any point where traffic will be leaving a construction site to an existing access road way or other paved surface. Its purpose is to reduce or eliminate the tracking of sediment onto public roads by construction vehicles. This helps protect receiving waters from sediment carried by stormwater runoff from public roads.

Considerations

- Only construction traffic ***leaving*** the site is required to use the temporary stabilized exit. Consider providing a separate, unprotected, entrance for traffic entering the site. This will increase the longevity of the stabilized exit by eliminating heavy loads entering the site and reducing the total traffic over the device.
- Locate construction entrances and exits to limit sediment leaving the site and to provide for maximum utility by all construction vehicles. Avoid entrances that have steep grades and entrances at curves in public roads.
- The entrance should be maintained in a condition that will prevent tracking or flowing of sediment onto public rights-of-way. This may require periodic top dressing with additional stone as conditions demand, and repair and/or maintenance of any measures used to trap sediment.

Maintenance Requirements

The exit should be maintained in a condition that will prevent tracking of sediment onto public rights-of-way.

- When the control pad becomes ineffective, the stone should be removed along with the collected soil material, regraded on site, and stabilized. The entrance should then be reconstructed.
- The contractor should sweep the pavement at exits whenever soil materials are tracked onto the adjacent pavement or traveled way.
- When wheel washing is required, it should be conducted on an area stabilized with aggregate, which drains into an approved sediment-trapping device. All sediment should be prevented from entering storm drains, ditches, or waterways.

Specifications

Temporary construction exits should meet the following requirements:

- The minimum stone used should be 3-inch crushed stone.
- The minimum length of the pad should be 75 feet, except that the minimum length may be reduced to 50 feet if a 3-inch to 6-inch high berm is installed at the entrance of the project site.
- The pad should extend the full width of the construction access road or 10 feet, whichever is greater.
- The pad should slope away from the existing roadway.
- The pad should be at least 6 inches thick.
- A geotextile filter fabric should be placed between the stone pad and the earth surface below the pad.

- The pad should be maintained or replaced when mud and soil particles clog the voids in the stone such that mud and soil particles are tracked off-site.
- Natural drainage that crosses the location of the stone pad should be intercepted and piped beneath the pad, as necessary, with suitable outlet protection.

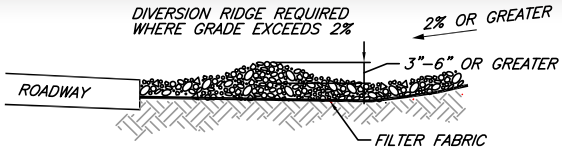

SECTION A – A

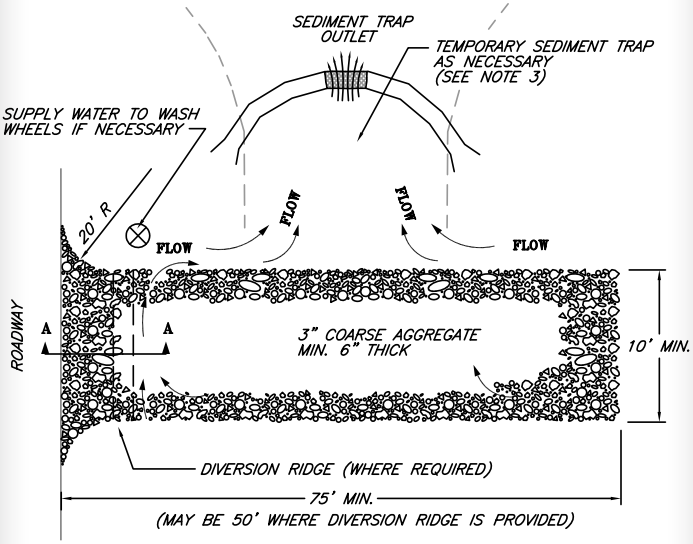

PLAN

NOTES:

1. THE ENTRANCE SHALL BE MAINTAINED IN A CONDITION THAT WILL PREVENT TRACKING OR FLOWING OF SEDIMENT ONTO PUBLIC RIGHT–OF–WAYS. THIS MAY REQUIRE TOP DRESSING, REPAIR AND/OR CLEAN OUT OF ANY MEASURES USED TO TRAP SEDIMENT.

2. WHEN NECESSARY, WHEELS SHALL BE CLEANED PRIOR TO ENTRANCE ONTO PUBLIC RIGHT–OF–WAY.

3. WHEN WASHING IS REQUIRED, IT SHALL BE DONE ON AN AREA STABILIZED WITH CRUSHED STONE THAT DRAINS INTO AN APPROVED SEDIMENT TRAP OR SEDIMENT BASIN.

TEMPORARY GRAVEL CONSTRUCTION EXIT

ADAPTED FROM J. McCULLAH 1994

TEMPORARY SEDIMENT TRAP

General Description

A sediment trap is a small, temporary ponding area to intercept sediment-laden runoff from small disturbed areas. Intercepted runoff is retained long enough to allow for settling of the coarser sediment particles. A sediment trap is usually installed in a drainage swale or channel, at a storm drain or culvert inlet, or other points of discharge from a disturbed area.

Considerations

- A sediment trap should be installed as close as possible to the disturbed area or sediment source.
- Sediment traps should be used in drainage ways with small watersheds (contributing drainage area less than 5 acres). For larger contributing areas, engineered sediment basins should be used instead.
- Sediment traps should be installed where runoff from undisturbed areas can be excluded from the trap.
- Traps should be located to obtain maximum storage benefit from the terrain, as well as for ease of removal and disposal of accumulated sediment.

Maintenance Requirements

- Sediment traps should be inspected at least weekly during construction and after every storm (or daily during prolonged rainfall periods), to insure that they are functioning properly and are not damaged. Repairs should be made immediately.
- Sediment should be removed and the trap restored to original capacity when sediment has accumulated to 50% of the original volume.
- The materials removed from the trap should be properly disposed of and stabilized.
- Sediment trap outlets should be examined at the time of inspection for any damage, and repaired immediately if any such damage is observed.
- Geotextile fabric or stone used around a pipe-outlet riser should be checked periodically and replaced when the material has become clogged with sediment.

Specifications

Temporary sediment traps should meet the following requirements:

- Sediment traps should be located so that they can be installed prior to disturbing the area they are to protect.
- The trap should be installed as close to the disturbed area or source of sediment as possible.
- The maximum contributing drainage area to the trap should be less than 5 acres.
- The minimum volume of the trap should be 3,600 cubic feet of storage for each acre of drainage area.
- The side slopes of the trap should be 3:1 or flatter, and should be stabilized immediately after their construction.

Embankments:

- The maximum height of the sediment trap embankment should be 4 feet when measured from the lowest point of natural ground on the downstream side of the embankment.
- The minimum top width of the embankment should be 6 feet.

Outlets (General Requirements):

- The outlet should be designed, constructed and maintained in such a manner that sediment does not leave the trap and that erosion at or below the outlet does not occur.
- Outlets should be designed so that the top of the embankment is a minimum of 1 foot above the crest elevation of the outlet. The outlet of the trap should be a minimum of one foot below the crest of the trap
- The outlet should discharge to a stabilized area. The outlets must empty onto undisturbed ground, into a watercourse, stabilized channel or a storm sewer system.
- Outlets may be constructed as earth spillways, stone outlets, or pipe outlets.

Earth Outlets:

- An earth outlet sediment trap has a discharge point that is either over natural ground or cut into natural ground.
- The outlet width should be equal to 6 times the drainage area in acres.
- The embankment and outlet should be vegetated within 3 days of construction.

Stone Outlets:

- A stone outlet sediment trap has an outlet consisting of a crushed stone section in the embankment.

- The stone section should be located at the low point of the natural ground, as determined at the downstream side of the embankment.
- The outlet should be constructed of minimum size 1 ½" crushed stone.

Pipe Outlet:

- A pipe outlet sediment trap has a pipe through the embankment, with an inlet consisting of a perforated riser.
- The pipe and riser should be constructed of corrugated metal. Plastic pipe (polyvinyl chloride or high-density polyethylene) may be considered, if the piping is located where it will not be subject to damage from vehicle traffic or from ice and frost conditions.
- The top 2/3 of the riser should be perforated with 1-inch diameter holes spaced 8 inches vertically and 10 to 12 inches horizontally around the pipe.
- Anchoring Weight: The riser should have a base with sufficient weight to prevent flotation of the riser. Two approved bases are: (1) A concrete base 12 inches thick with the riser embedded 9 inches into the concrete base, or (2) 1/4" minimum thickness steel plate attached to the riser by a continuous weld around the circumference of the riser to form a watertight connection. The plate should have 2.5 feet of stone, gravel, or earth placed on it to prevent flotation. In either case, each side of the square base measurement should be the riser diameter plus 24 inches.
- In order to increase the efficiency of the trap, the riser can be wrapped with a geotextile fabric held in place by woven wire and secured by strapping. The cloth should cover an area at least six (6) inches above the highest hole and six (6) inches below the lowest hole. The top of the riser pipe should not be covered with filter cloth.
- Crushed stone can also be used around the riser to increase trap efficiency.

- The minimum pipe sizes should be determined as provided in the following table:

Maximum Drainage Area (acres)	Minimum Barrel Diameter (inches)	Minimum Riser Diameter (inches)
1	15	21
2	18	24
3	21	30
4	24	30
5	30	36

Combination of Earth, Stone, or Pipe Outlets:

- A temporary sediment trap may have a combination of outlets. For instance, a 16.5-foot earth spillway outlet (adequate for 3 acres) and a pipe outlet with an 18" CMP barrel with a 24" CMP riser (adequate for 2 acres) could be used for the maximum drainage area of 5 acres.

Vegetation:

- All embankments, earth spillways, and disturbed areas below the structure should be vegetated within 72 hours of completion of the construction of the structure.
- If the structure is not planned for more than one vegetative growing season, the structure may be vegetated using the recommendation of the Temporary Vegetation Best Management Practice described in this manual.
- Basins that will be carried over the winter and into the next vegetative growing season should be vegetated using the recommendations for Permanent Vegetation Best Management Practice

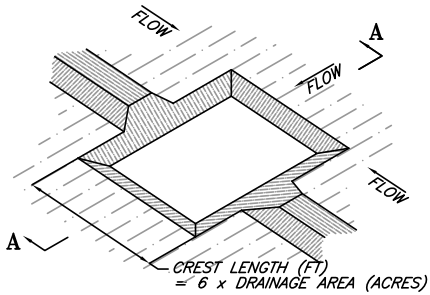

ISOMETRIC VIEW

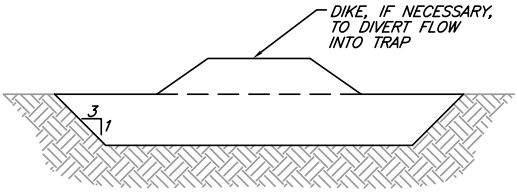

SECTION A–A

EXCAVATED

EARTH OUTLET
SEDIMENT TRAP

ADAPTED FROM ROCKINGHAM COUNTY CONSERVATION DISTRICT

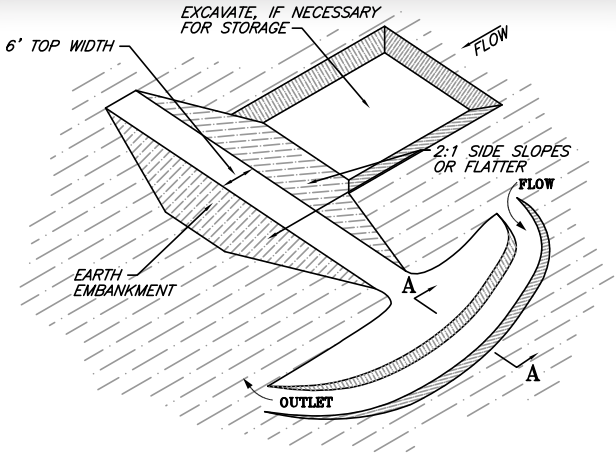

ISOMETRIC VIEW

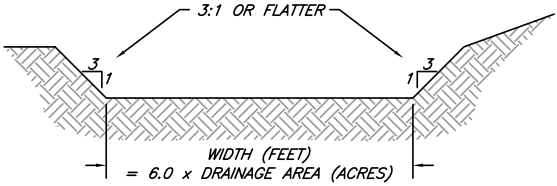

SECTION A–A

EMBANKMENT

EARTH OUTLET
SEDIMENT
TRAP

ADAPTED FROM ROCKINGHAM COUNTY CONSERVATION DISTRICT

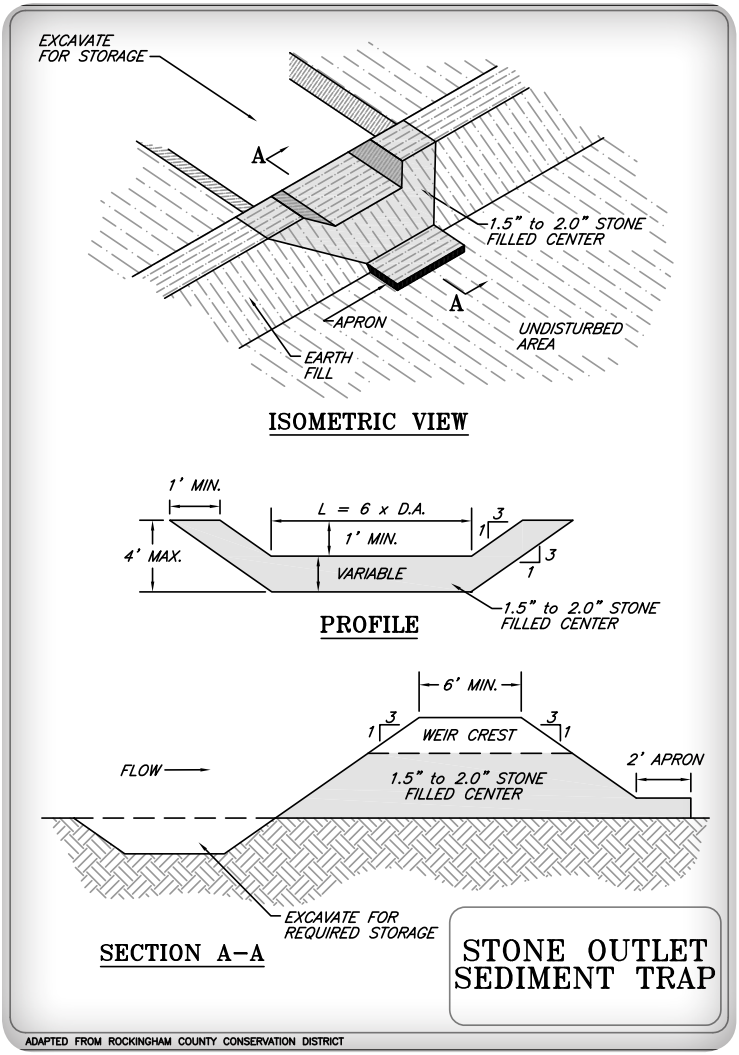
EXCAVATE FOR STORAGE
A
1.5" to 2.0" STONE FILLED CENTER
A
APRON
UNDISTURBED AREA
EARTH FILL
ISOMETRIC VIEW
1' MIN.
L = 6 x D.A.
3
1
1' MIN.
4' MAX.
VARIABLE
3
1
1.5" to 2.0" STONE FILLED CENTER
PROFILE
6' MIN.
3
1
3
1
WEIR CREST
2' APRON
FLOW
1.5" to 2.0" STONE FILLED CENTER
EXCAVATE FOR REQUIRED STORAGE
SECTION A–A
STONE OUTLET SEDIMENT TRAP
ADAPTED FROM ROCKINGHAM COUNTY CONSERVATION DISTRICT

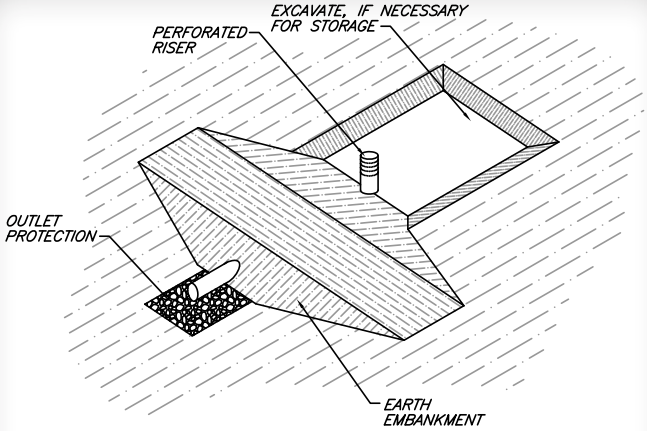

ISOMETRIC VIEW

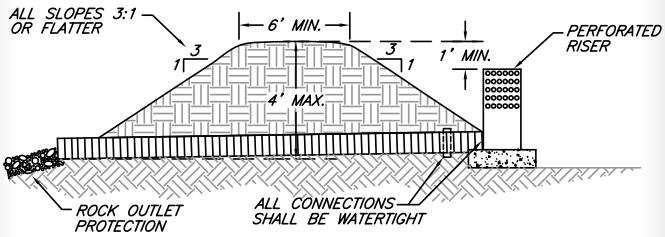

EMBANKMENT SECTION THROUGH BARREL & RISER

PIPE OUTLET SEDIMENT TRAP

ADAPTED FROM ROCKINGHAM COUNTY CONSERVATION DISTRICT

TEMPORARY SEDIMENT BASIN

General Description

A sediment basin is a water impoundment constructed to capture and store sediment and/or debris. Sediment is removed by temporarily storing sediment-laden runoff, allowing time for the sediment particles to settle. In some instances, settling may be enhanced by the introduction of flocculants (see separate description of the Flocculants Best Management Practice). Flocculants should only be used upon approval by NHDES.

Sediment basins may be made by constructing a dam or embankment or by excavating a depression.

Sediment basins differ from sediment traps, in that basins are engineered impoundment structures, and may serve larger areas than sediment traps.

The sediment basin's is designed to:

- Detain stormwater volume and slowly release it to the downstream waterways;
- Trap sediment originating from construction site and prevent subsequent deposition in downstream drainage waterways;
- Provide storage of the trapped sediment and debris.

Considerations

- Sediment basins should only be used where the following conditions exist:
    - Failure of the dam will not result in loss of life; damage to homes, commercial or industrial buildings, main highways, or railroads; or interruption of the use or service of public utilities.

- The basin is designed by a Professional Engineer licensed in New Hampshire.
- The basin is designed in accordance with the practices applicable to impoundment embankments, as identified in Volume 2 of the New Hampshire Stormwater Manual.

- It is possible to use a basin that is designed for eventual permanent use as a detention basin or water quality treatment facility for the final constructed project. However, this practice should not be undertaken unless specifically provided in the design of the project, and authorized by the design engineer. In some cases, the long-term operating integrity of a basin can be adversely affected by temporary use as a sediment basin (such as potential clogging of soils intended to provide future infiltration function).
- A sediment basin should be installed as close as possible to the disturbed area or sediment source.
- Sediment basins should be installed where runoff from undisturbed areas can be excluded from the structure.
- Sediment basins mostly trap coarse-grained sediments. Fine-grained sediments such as silts and clays will remain suspended in the water and will travel off-site unless the water is detained for an extended period of time, or unless other treatment measures (such as use of flocculants) are implemented to enhance settling of these materials.
- Sediment basins, like detention ponds, can result in warmer water temperatures than the natural condition. Care must be exercised to not locate discharges from sediment basins near to cold-water streams.
- Pond locations and construction activities may affect downstream water quality, wetlands and water-related wildlife habitats. These conditions must be considered in the design.
- Overall planning and design should be carefully considered to minimize the number of sediment basins required.

Maintenance Requirements

Sediment basin installations need to be regularly inspected during their installation. If there is any evidence of siltation downstream of the basin, corrective measures need to be implemented to keep sediment from entering downstream areas.

- Sediment basins should be inspected at least weekly during construction and after every storm (or daily during prolonged rainfall periods), to insure that they are functioning properly and are not damaged. Repairs should be made immediately.
- Outlet structures and emergency spillways should be examined at the time of inspection for any damage, and repaired immediately if any such damage is observed.
- Embankments should be examined at the time of inspection to ensure that they are structurally sound, are not showing signs of seepage, and are not damaged by erosion or by construction activities.
- The water discharged from sediment basins should be monitored during storm events to determine how well they are functioning and if sedimentation is apparent, additional erosion control measures should be applied to eliminate the source of sedimentation.
- Geotextile fabric or stone used around a pipe-outlet riser should be checked periodically and replaced when the material has become clogged with sediment.
- Sediment should be removed and the trap restored to original capacity when sediment has accumulated to the original design sediment storage volume. Note that the design sediment storage volume is typically only a small portion of the total volume of the basin.
- The materials removed from the basin should be properly disposed of and stabilized.

Specifications

Sediment basins must meet the following requirements:

- Basins must be constructed and stabilized prior to disturbing the watershed above them. If sediment ponds will be stabilized with vegetation, they must be installed early in the growing season.
- Erosion and sediment control measures should be employed during the construction of the sediment basin to protect downstream waterbodies from sedimentation due to the construction disturbance required to install this BMP.
- The capacity of the sediment basin should be equal to the stormwater volume to be detained plus the volume of sediment expected to be trapped. Periodic removal of sediment will be necessary to maintain the pond's capacity.
- An outlet structure should be provided adequate to handle the 10-year frequency discharge without failure or significant erosion.
    - The outlet should be designed, constructed and maintained in such a manner that sediment does not leave the trap and that erosion at or below the outlet does not occur.
    - Outlets should be designed so that the top of the embankment provides the minimum freeboard specified in Volume 2 of the Stormwater Manual.
    - The outlet should discharge to a stabilized area. The outlets must empty onto undisturbed ground, into a watercourse, stabilized channel or a storm sewer system. Outlet protection should be provided.
- The minimum sediment storage volume of the basin should be 3,600 cubic feet of storage for each acre of drainage area. The capacity of the sediment basin should be equal to the stormwater volume to be detained plus the volume of sediment expected to be trapped.
- The side slopes of the basin should be 3:1 or flatter, and should be stabilized immediately after their construction.

- Embankments should be designed to meet applicable regulations, and should meet the design requirements identified in Volume 2 of the NH Stormwater Manual for embankment construction.
- The drainage area above the pond must be protected against erosion so that expected sedimentation will not shorten the planned effective life of the structure.
- Basins must be designed to be drained within a 3-day period.
- An emergency spillway should be provided to safely pass the 50-year design storm without damage to the embankment, assuming that the basin is full to design depth at the beginning of the storm. The emergency spillway should not be installed in fill.
- All areas disturbed during construction should be stabilized within seven calendar days of that disturbance in accordance with the Permanent Vegetation BMP, Temporary Mulching BMP, or other appropriate structural BMP. All construction of sediment basins must be completed and seeded by September 15th if vegetative measures will be used for final stabilization. Otherwise, side slopes must be stabilized with an alternative approved long-term stabilization measure. If structural measures such as riprap will be used for final stabilization, this time limit will not apply. Water should not be directed to the sediment basin until the basin is stabilized with vegetative or structural measures.
- A sediment basin with a pipe outlet structure should be fitted with a perforated riser surrounded by a gravel cone. This will serve to filter fine particulate material. A geotextile filter should be installed around the riser prior to the placement of the gravel.

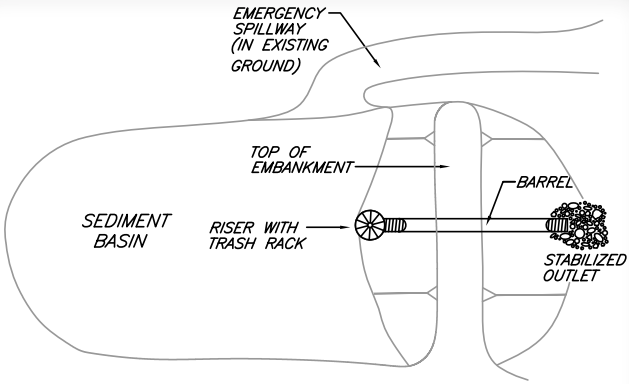

PLAN

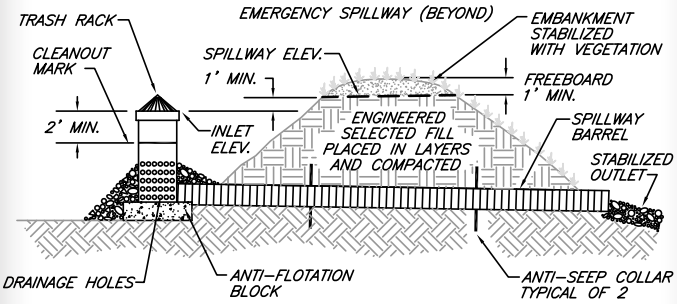

SECTION

NOTES:

1. THE TEMPORARY SEDIMENT BASIN, DESIGNED BY A QUALIFIED PROFESSIONAL, IS REQUIRED FOR DISTURBED AREAS GREATER THAN 5 ACRES WITHIN A DRAINAGE AREA LESS THAN 100 ACRES.
2. THE SEDIMENT BASIN WILL BE REMOVED WITHIN 3 YEARS.

TYPICAL SEDIMENT BASIN

ADAPTED FROM J. McCULLAH 1994

CONSTRUCTION DEWATERING

General Description

This construction dewatering practice is intended to prevent sedimentation associated with the management of water removed during construction from excavations, cofferdams, and other work areas that trap stormwater and groundwater.

Construction sites in New Hampshire typically require construction dewatering operations. Excavations that do not "daylight" to existing grade trap either rainwater or groundwater, and cofferdams collect rain, ground or seepage water within the work area. This water needs to be removed before certain operations can be performed or to keep work conditions safe. Contractors typically use ditch pumps to dewater these enclosed areas. If care is not taken to select the point of discharge and provide adequate treatment, the pumped water may discharge to downgradient natural resources such as lakes, wetlands, or streams, with subsequent sedimentation of those waterbodies.

Construction dewatering activities must be conducted to:

- Prevent the discharged water from eroding soil on the site.
- Remove sediment from the collected water.
- Preserve downgradient natural resources and property.
- Choose the best location for discharge in order to meet the above objectives.

Considerations

- The discharge areas should be chosen with careful consideration to the downgradient water resources and the existing landscape's ability to treat water flows from the dewatering process. Wooded buffers and flat to moderate slopes provide the best opportunity for filtration and absorption of such discharges.
- Care must be exercised to prevent contact of water from construction dewatering with oil, grease, other petroleum products, or toxic and hazardous materials. Contaminated runoff must be contained, treated, and discharged or removed in accordance with NHDES requirements.
- All requirements of state law and permit requirements of local, state, and federal agencies must be met, including the Construction Dewatering General permit for projects that propose to discharge construction dewatering water to wetlands, intermittent streams, or other surface waters.
- The discharge should be stopped immediately if the receiving area shows any sign of instability or erosion.

Maintenance Requirements

- During the active dewatering process, inspection of the dewatering facility should be reviewed at least daily, with more frequent or continuous supervision as warranted by site conditions.
- Special attention should be paid to the buffer area for any sign of erosion or concentration of flow that may damage the buffer's vegetation or underlying soil.
- The visual quality of the effluent should be monitored to assess whether additional treatment can be provide to prevent sedimentation of downstream receiving waters.

Specifications

Dewatering excavated areas is conducted in two distinct operations: the removal of the collected water within the excavation and the treatment of the collected water.

Water Removal:

- Install diversion ditches or berms to minimize the amount of clean stormwater runoff allowed into the excavated area.
- For trench excavation, limit the trench length to 500 feet and place the excavated material on the upgradient side of the trench.
- The removal of water from the excavated area can be accomplished by numerous methods, including but not limited to gravity drainage through channels, mechanical pumping, siphoning, and using the bucket of construction equipment to scoop and dump water from the excavation. Water may also be withdrawn from the ground adjacent to an excavation by pumping of well points.
- All channels, swales, and ditches dug for discharging water from the excavated area should be stable prior to directing discharge to them. If flow velocities cause erosion within these channels, then the channel should be re-stabilized; if necessary, a stone lining or other stabilizing measure should be used.
- Bucketed water should be discharged in a stable manner to the sediment removal area. A splash pad of riprap underlain with geotextile may be necessary to prevent scouring of the soil in the basin.
- Dewatering during periods of intense, heavy rain should be avoided.

Sediment Removal:

- There are a number of methods for settling or filtering sediment that a contractor may use. Typical measures include

temporary basins or sediment traps, and manufactured fabric bags designed for filtering pumped discharges.

- Flow to the sediment removal structure must not exceed the structure's volume capacity or the structure's capacity to settle and filter flow.
- Sediment removal structures should discharge wherever possible to a well-vegetated buffer through sheet flow and should maximize the distance to the nearest water resources and minimizing the slope of the buffer area.

Temporary Basin Designs:

Temporary basin designs include but are not limited to:

- An enclosure of Jersey Barriers lined with geotextile fabric.
- A temporary enclosure constructed with hay bales, silt fence, or both. Erosion control mix also may be incorporated with silt fence or hay bales. Silt fence must be supported to prevent it from collapsing under the weight of impounded water.
- Chambered settling system fabricated of concrete or steel and designed for sediment removal.
- Excavated or bermed sedimentation trap. See the description of SEDIMENT TRAP in this manual.
- A sediment basin (including temporarily modified stormwater detention ponds), if designed in accordance with the description of SEDIMENT BASIN in this manual.

Manufactured Devices:

- Water from construction operations may be discharged to a manufactured filter structure specifically designed for sediment removal, such as a manufactured silt "bag" or other similar product.

Discharges:

- Water that is visibly clear of sediment, and has not come into contact with other contaminants, may be directly discharged into well-vegetated buffered areas with less than 2% slope, as long as a method is used to spread flow into sheet flow as it enters the buffer.
- Never discharge to areas that are bare or newly vegetated.
- The discharge should be stopped immediately if the receiving area is showing any sign of instability or erosion.

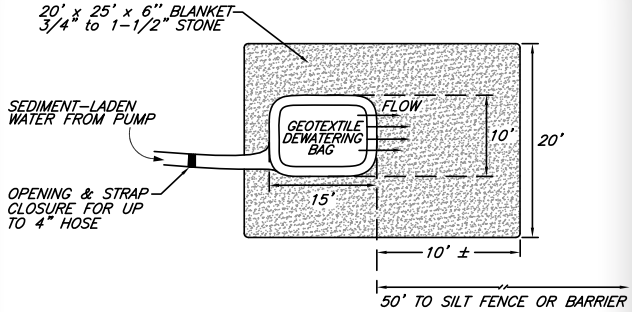

PLANVIEW

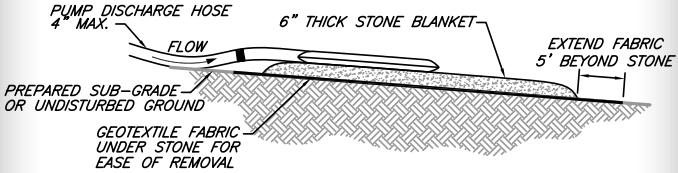

PROFILE

NOTES:

1. GEOTEXTILE BAG MATERIAL BASED ON PARTICLE SIZE IN PUMPED WATER, I.E., FOR COARSE PARTICLES A WOVEN MATERIAL; FOR SILTS/CLAYS A NON-WOVEN MATERIAL.
2. DO NOT OVER PRESSURIZE BAG OR USE BEYOND CAPACITY.
3. LOCATE DISCHARGE SITE ON FLAT UPLAND AREAS AS FAR AWAY AS POSSIBLE FROM STREAMS, WETLANDS, OTHER RESOURCES AND POINTS OF CONCENTRATED FLOW.
4. DOWNGRADIENT FROM RECEIVING AREA MUST BE WELL VEGETATED OR OTHERWISE STABLE FROM EROSION, E.G., FOREST FLOOR OR COARSE GRAVEL/STONE.
5. DISCHARGE LOCATION SHALL MEET ALL REGULATORY SETBACKS FROM WETLANDS AND OTHER WATER COURSES.

GEOTEXTILE DEWATERING BAG

ADAPTED FROM MAINE EROSION AND SEDIMENT CONTROL BMP MANUAL 2003

FLOCCULANTS

General Description

Flocculants (or coagulants) are natural materials or chemicals that cause colloidal particles (clay) to coagulate. The coagulated particles group together to form flocs, which settle out of detained stormwater.

Flocculants can be used in conjunction with sediment basins and sediment traps to remove suspended clay and fine silt particles from stormwater runoff prior to discharge. Use of flocculants improves the ability of these settling facilities to remove finer particles than would be removed otherwise and can increase the percentage of fines removed during the detention period.

Flocculants should only be used upon approval by NHDES.

Considerations

Fine silts and clays are difficult to remove with conventional settling techniques such as sediment traps or basins. Colloidal particles in particular can remain in suspension indefinitely. When these soil materials are present in significant quantities, other measures will need to be considered to prevent impacts to receiving waters.

If a construction site is characterized by soils with significant amounts of fine silts and clays, it is particularly critical to prevent erosion of these soils in the first place, because of the difficulty in removing fine and colloidal particles from suspension.

There is a variety of flocculant materials available. Any product selected for use must be non-toxic and safe for both human and aquatic life and should not increase Biochemical Oxygen Demand (BOD) in the downstream receiving waters.

The use of flocculants must consider the following:

- Selection of an appropriate flocculant is highly dependent on the soil particle type and concentration.
- Flocculants require specific dosing rates that must be developed on a site-specific basis.

- Flocculants must be thoroughly mixed with the stormwater being treated.
- Settling basins must have sufficient volume and flow capacity to provide the necessary detention time for settling.
- When flocculants are used, the discharge must be carefully monitored to ensure that the chemical is adequately removed by settling.
- Flocculated material must be periodically removed to maintain system capacity, and upon completion of the project unless otherwise approved by NHDES.

For these reasons, flocculants are typically only used in special circumstances, and should be used under the direction of qualified professionals, and according to NHDES regulations.

Maintenance Requirements

Site-specific maintenance requirements applicable to the use of flocculants should be determined in coordination with NHDES staff at the time that flocculants are reviewed and approved for use on a project.

Specifications

- Sites should be stabilized as soon as possible using conventional measures to minimize the need to use flocculants.
- Flocculants should not be applied directly to or within 100 feet of any surface water unless specifically approved by the NHDES in writing.
- Flocculants should not be used unless the person requesting approval of such use demonstrates that due to the presence of on-site clay colloidal particles, other erosion control measures, alone or in combination, will not be sufficient to prevent turbidity violations and sedimentation in downstream receiving waters. Turbidity violations are described in Env-Wq 1703.11.
- Flocculants should only be used in strict accordance with the procedures and materials specifications outlined in the NH Alteration of Terrain (AoT) regulations (Env-Wq 1506.12).

4-3. WINTER WEATHER STABILIZATION & CONSTRUCTION PRACTICES

General Description

A project involving construction activity extending beyond one construction season will require measures to stabilize the site for the over-winter period. If a construction site is not stabilized with pavement, a road gravel base, 85 % mature vegetation cover, or riprap by October 15, then the site must be protected with over-winter stabilization. The winter construction period is from October 15 through May 15.

Considerations

Winter excavation and earthwork activities need to be limited in extent and duration, to minimize potential erosion and sedimentation impacts.

- No more than one acre of the site should be exposed (without stabilization) at any one time. Generally, the exposed area should be limited to only those areas in which work will occur during the following 15 days and that can be mulched in one day prior to any snow or rainfall event.
- Subsequent work areas should not be exposed until the previously exposed work are has been fully stabilized.
- An area is considered "exposed" until stabilized with gravel base on a road or parking area, pavement, vegetation, mulching, erosion control mix, erosion control mats, or riprap.
- All erosion and sediment control measures installed for the project should have routine maintenance and cleaning completed, and should be inspected and repaired as needed in preparation for the construction season. Temporary

embankments should be fully vegetated or otherwise stabilized by accepted methods.

Maintenance Requirements

Maintenance measures should continue as needed throughout construction, including the over-winter period. After each rainfall, snowstorm, or period of thawing and runoff, the site contractor should conduct an inspection of all installed erosion control measures and perform repairs as needed to insure their continuing function.

For any area stabilized by temporary or permanent seeding prior to the onset of the winter season, the contractor should conduct an inspection in the spring to ascertain the condition of vegetation cover, and repair any damage areas or bare spots and reseed as required to achieve an established vegetative cover (at least 85% of area vegetated with healthy, vigorous growth).

Specifications

To adequately protect water quality during cold weather and during spring runoff, the following stabilization techniques should be employed during the period from October 15th through May 15th.

- The area of exposed, unstabilized soil should be limited to one acre and should be protected against erosion by the methods described in this section prior to any thaw or spring melt event. Subject to applicable regulations, the allowable area of exposed soil may be increased if activities are conducted according to a winter construction plan, developed by a professional engineer licensed to practice in the state of New Hampshire or a Certified Professional in Erosion and Sediment Control as certified by the CSPESC Council of EnviroCert International, Inc.

- Stabilization as follows should be completed within a day of establishing the grade that is final or that otherwise will exist for more than 5 days:
    - All proposed vegetated areas having a slope of less than 15% which do not exhibit a minimum of 85% vegetative growth by October 15th, or which are disturbed after October 15th, should be seeded and covered with 3 to 4 tons of hay or straw mulch per acre secured with anchored netting, or 2 inches of erosion control mix (see description of erosion control mix berms for material specification).
    - All proposed vegetated areas having a slope of greater than 15% which do not exhibit a minimum of 85% vegetative growth by October 15th, or which are disturbed after October 15th, should be seeded and covered with a properly installed and anchored erosion control blanket or with a minimum 4 inch thickness of erosion control mix, unless otherwise specified by the manufacturer. Note that compost blankets should not exceed 2 inches in thickness or they may overheat.
- All stone-covered slopes must be constructed and stabilized by October 15.
- Installation of anchored hay mulch or erosion control mix should not occur over snow of greater than one inch in depth.
- All mulch applied during winter should be anchored (e.g., by netting, tracking, wood cellulose fiber).
- Stockpiles of soil materials should be mulched for over winter protection with hay or straw at twice the normal rate or with a four-inch layer of erosion control mix. Mulching should be done within 24 hours of stocking, and re-established prior to any rainfall or snowfall. No soil stockpile should be placed (even covered with mulch) within 100 feet from any wetland or other water resource area.
- Frozen materials, (e.g., frost layer that is removed during winter construction), should be stockpiled separately and in a location that is away from any area needing to be protected. Stockpiles of frozen material can melt in the spring and become

unworkable and difficult to transport due to the high moisture content in the soil.

- Installation of erosion control blankets should not occur over snow of greater than one inch in depth or on frozen ground.
- All grass-lined ditches and channels should be constructed and stabilized by September 1. All ditches or swales which do not exhibit a minimum of 85% vegetative growth by October 15th, or which are disturbed after October 15th, should be stabilized temporarily with stone or erosion control blankets appropriate for the design flow conditions, as determined by a qualified Professional Engineer or a Certified Professional in Erosion and Sediment Control as certified by the CSPESC Council of EnviroCert International, Inc. If a stone lining is necessary, the contractor may need to re-grade the ditch as required to provide adequate cross-section after allowing for placement of the stone.
- All stone-lined ditches and channels must be constructed and stabilized by October 15.
- After November 15th, incomplete road or parking areas where active construction of the road or parking area has stopped for the winter season should be protected with a minimum 3 inch layer of sand and gravel with a gradation such that less than 12% of the sand portion, or material passing the number 4 sieve, by weight, passes the number 200 sieve.
- Sediment barriers that are installed during frozen conditions should consist of erosion control mix berms, or continuous contained berms. Silt fences and hay bales should not be installed when frozen conditions prevent proper embedment of these barriers.

4-4. Erosion and Sediment Control Monitoring

To ensure the successful performance of erosion and sediment control measures, it is essential to monitor the control measures and other construction activities, and to adjust, modify, and install additional controls to address evolving conditions. During construction, site conditions undergo frequent and sometimes continual change as earthwork activity proceeds, construction moves from one phase to another, and disturbed areas are stabilized. Changing weather conditions, construction traffic, and other conditions can affect the condition and performance of erosion and sediment control measures. As time passes, erosion and sediment control devices and finished or partially stabilized surfaces are subject to wear and incidental damage. Control measures must be maintained in serviceable condition to remain effective. Because of these changing site conditions, the contractor must continually monitor erosion and sediment control measures to ensure that they perform as intended and that they receive appropriate and timely maintenance. Further, the contractor should periodically evaluate general site conditions, to assess whether additional measures are needed to prevent erosion and sedimentation.

Inspection of Erosion and Sediment Controls

The contractor should assign a qualified person or persons who have the responsibility and authority for the implementation, operation, monitoring, and maintenance of erosion and sediment control measures to conduct inspections of erosion and sediment controls. The qualified personnel should be knowledgeable in the principles and practice of erosion and sediment controls and possesses the skills to assess conditions at the construction site that could impact stormwater quality as well as to assess the effectiveness of any sediment and erosion control measures selected to control the quality of stormwater discharges from the construction activity.

The person's responsibilities should include:

- Ensuring measures stipulated in design plans and permit documents are installed in the required locations;
- Inspecting the site and arranging for installation of additional controls where and when required;
- Periodically inspecting BMPs that have been installed, to confirm that the measures are functional and meeting their intended purposes, and arranging for cleaning or repairs as indicated by such inspection. Each measure described in this Manual has inspection requirements included in the section entitled "Maintenance". Many of the measures require inspections at least once a week and within 24 hours of the end of a storm with a rainfall amount of 0.5 inch or greater; others require daily inspection or ongoing monitoring, particularly during periods of continual rainfall. More frequent inspections than those identified in the measure may be necessary for sites that are heavily traveled, when weather conditions are severe, and before major storms.
- Arranging for corrective action when control measures fail or are found to be otherwise ineffective. The person should coordinate with a professional experienced in erosion and sediment control (and any approving agency when that agency's approval is required) to assess the reason for failure and determine a course of action to restore the function of the measure, or install an alternative measure.
- Ensuring all erosion and sediment controls are properly installed and maintained on the construction site before predicted major storms. A major storm is defined as a storm predicted by the National Office of Atmospheric Administration (NOAA) Weather Service with warnings of flooding, severe thunderstorms or similarly severe weather conditions or effects.

- Arranging for the timely revision, as warranted, of any Storm Water Pollution Prevention Plan (SWPPP) prepared for the project.
- Maintaining records of inspections, maintenance activities, corrective actions, repairs, and completion of permanent stabilization measures.

Contingency Measures During Construction

The Erosion and Sediment Control Plan and/or SWPPP should include provisions for addressing construction contingencies, specifically tailored to the site conditions and water resources associated with the project. At a minimum, the contractor should provide for the following:

- A designated responsible person(s) for conducting the inspection and the follow-up adjustments and repairs, with the authority to implement necessary adjustments and additions to erosion and sediment controls to meet evolving conditions and address emergency problems. Around-the-clock contact information for the person(s) should be furnished to municipal authorities (and NHDES personnel, as applicable), to facilitate communications during emergency events.
- A dedicated stock of common materials for use in addressing erosion or sediment contingencies. Examples include, but are not necessarily limited to:
    - Spare silt fence, hay or straw bales, or erosion control mix for use as temporary sediment barriers.
    - Stockpile of mulch material for use in stabilizing areas damaged by weather or construction, along with mulch anchoring material.
    - Spare erosion control mat.
    - Stockpile(s) of stone suitable for repairing construction exits, check dams, and channel linings.